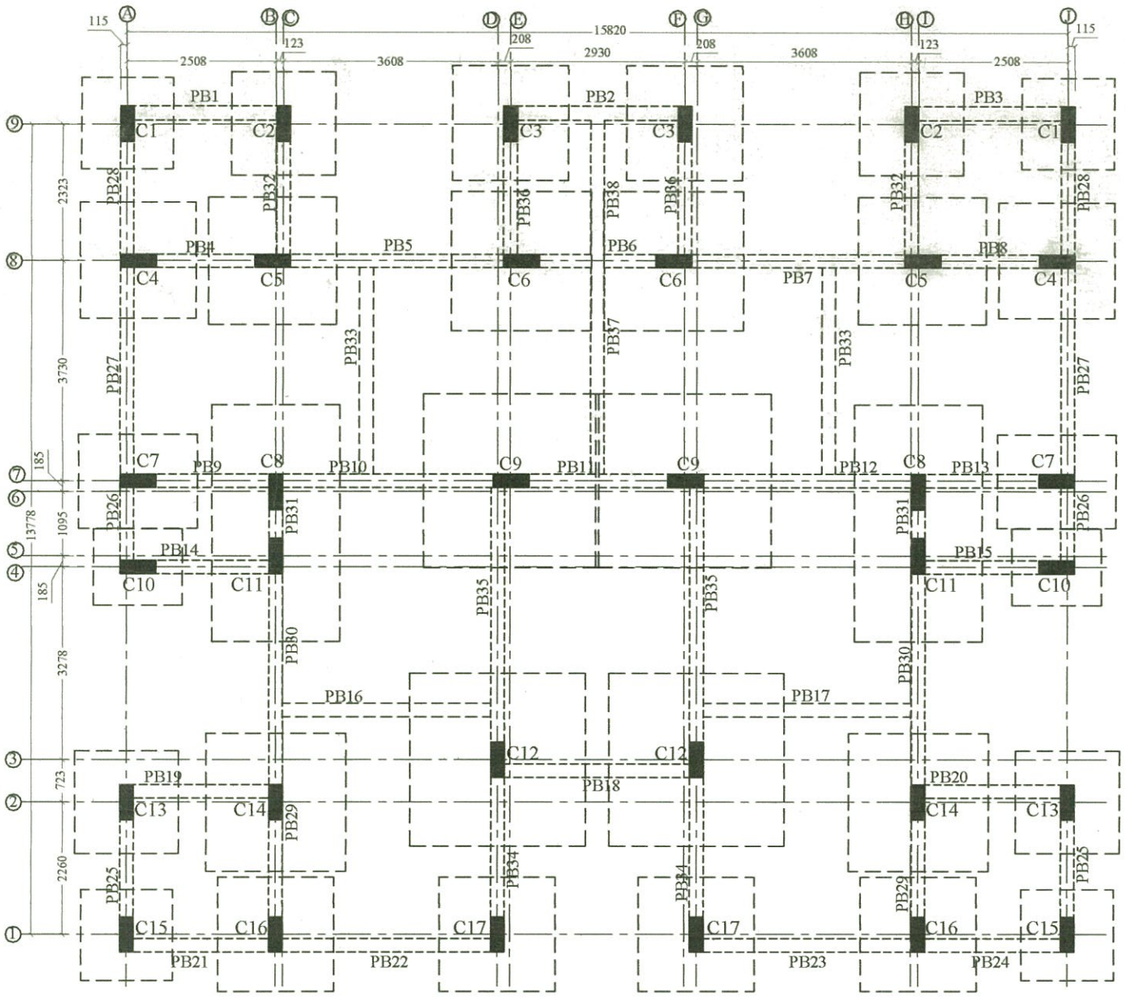

EXCAVATION & COLUMN LAYOUT PLAN

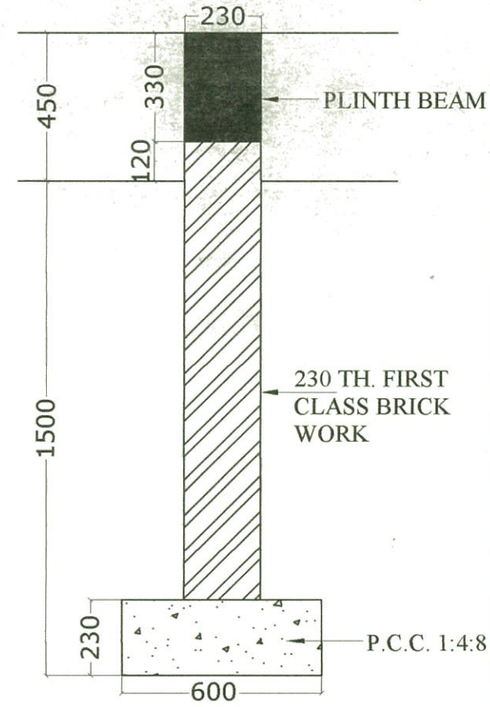

WALL FOUNDATION

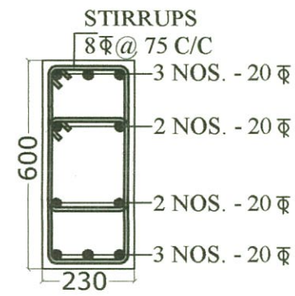

C8,C11

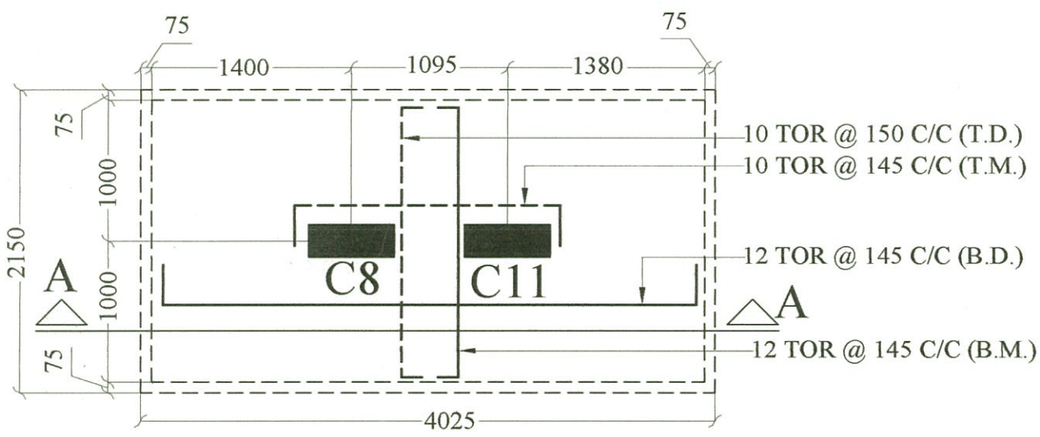

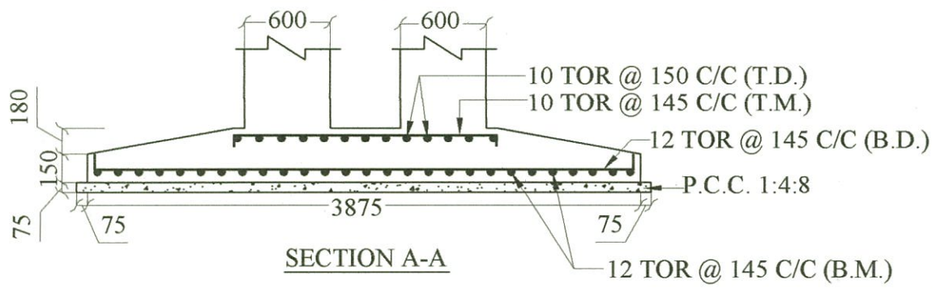

SECTION A-A

NOTES

1. READ THIS DRAWING IN CONJUCTION WITH RELEVANT ARCH. DRAWING.
2. ALL DIMENSIONS IN MM.
3. M20 GRADE CONCRETE SHALL BE USED UNLESS NOTED OTHERWISE.
4. REINFORCEMENT BAR TO BE USED SHALL BE HIGH YIELD STRENGTH DEFORMED BAR STRESS 415N/mm^2
5. ANY LAP OF BAR SHALL NOT BE LESS THAN 50xDIA OF LARGER DIA.
6. CLEAR COVER TO MAIN REINF.SHALL BE AS FOLLOWS

FOOTINGS	-	50MM.
WALL	-	25MM.
COLUMN	-	40MM.
BEAM	-	25MM.
SLAB	-	20MM.

7. ALL STEEL SHOULD BE FREE OF RUST, SCALE ,GREASE, DIRT, OIL, ETC.
8. ALL CONCRETE TO BE MECHANICALLY MIXED AND VIBRATED
9. ALL CONCRETE TO BE PLACED AGAINST STEEL OR WATER ROOF PLY. PUCCA SHUTTERING
10. NET ALLOWABLE BEARING CAPACITY OF SOIL IS TAKEN AS 10.00 TONS / SQM. AT 1.50 M. DEPTH BELOW GROUND LEVEL.
11. BUILDING IS DESIGN FOR GROUND + 2 FLOORS.
12. BUILDING IS DESIGN FOR E.Q. ZONE IV.

PROJECT

TYPE - I RESIDENCE FOR P.W.D. DEHRADUN.

TITLE

EXCAVATION & COLUMN LAYOUT PLAN & COLUMN DETAILS.

DRAWN	DATE	DRG. NO.	REV. NO.
SEEMA	03.10. 2012	TYPE -1- STR.-1	1

CONSULTANT :

SUNEET PRASAD
STRUCTURAL &
CONSULTING ENGINEER

Suneet Prasad.
SUNEET PRASAD
B. E., M. E. (CIVIL), M I V, F I V
AUTHORIZED STRUCTURAL ENGINEER
20, PHASE-I, ENGINEERS ENCLAVE
G.M.S. ROAD, DEHRADUN-248 001
REG. No: DoH - UK / ASE - III / 2008

Checked and approved
Gupta
SUBHASH CHANDRA GUPTA
B.E. Civil (Hon's), M. TECH. (Structure)
Reg. No. DOH-UK/ASE-VI/2008
University of Petrolium & Energy Studies

COLS.	EXCAVATION SIZE	FOUNDATION SIZE IN (MM)							REINF. IN FOOTING		COLUMN REINF. FOUNDATION TO F.F.
		L	B	D	l_1	b_1	a	b	nL	nB	
C1,C15	1550 X 1550	1400	1400	300	585	400	230	600	10 NOS. - 10ϕ	10 NOS. - 10ϕ	STIRRUPS 8ϕ@ 75 C/C; 3 NOS. - 16ϕ; 2 NOS. - 16ϕ; 3 NOS. - 16ϕ; 600; 230
C2,C13	1750 X 1750	1600	1600	300	685	500	230	600	12 NOS. - 10ϕ	12 NOS. - 10ϕ	STIRRUPS 8ϕ@ 75 C/C; 3 NOS. - 16ϕ; 2 NOS. - 16ϕ; 3 NOS. - 16ϕ; 600; 230
C3,C4, C16,C17	1950 X 1950	1800	1800	300	785	600	230	600	12 NOS. - 12ϕ	12 NOS. - 12ϕ	STIRRUPS 8ϕ@ 75 C/C; 3 NOS. - 20ϕ; 2 NOS. - 20ϕ; 3 NOS. - 20ϕ; 600; 230
C5	2150 X 2150	1500	1500	380	885	700	230	600	13 NOS. - 12ϕ	13 NOS. - 12ϕ	STIRRUPS 8ϕ@ 75 C/C; 3 NOS. - 20ϕ; 2 NOS. - 20ϕ; 3 NOS. - 20ϕ; 600; 230
C6,C14	2350 X 2350	2150	2150	380	985	800	230	600	17 NOS. - 12ϕ	17 NOS. - 12ϕ	STIRRUPS 8ϕ@ 75 C/C; 3 NOS. - 20ϕ; 2 NOS. - 20ϕ; 2 NOS. - 20ϕ; 3 NOS. - 20ϕ; 600; 230
C7	1750 X 2150	1600	1500	350	685	700	230	600	14 NOS. - 12ϕ	11 NOS. - 12ϕ	STIRRUPS 8ϕ@ 75 C/C; 3 NOS. - 20ϕ; 2 NOS. - 20ϕ; 3 NOS. - 20ϕ; 600; 230
C9	2950 X 2950	2800	2800	450	1285	1100	230	600	28 NOS. - 12ϕ	28 NOS. - 12ϕ	STIRRUPS & LINK 8ϕ@ 75 C/C; 3 NOS. - 25ϕ; 2 NOS. - 25ϕ; 2 NOS. - 25ϕ; 2 NOS. - 25ϕ; 3 NOS. - 25ϕ; 600; 230
C10	1450 X 1650	1300	1500	300	535	450	230	600	11 NOS. - 10ϕ	9 NOS. - 10ϕ	STIRRUPS 8ϕ@ 75 C/C; 3 NOS. - 16ϕ; 2 NOS. - 16ϕ; 3 NOS. - 16ϕ; 600; 230
C12	2950 X 2950	2800	2800	450	1285	1100	230	600	28 NOS. - 12ϕ	28 NOS. - 12ϕ	STIRRUPS 8ϕ@ 75 C/C; 3 NOS. - 25ϕ; 2 NOS. - 25ϕ; 2 NOS. - 25ϕ; 3 NOS. - 25ϕ; 600; 230

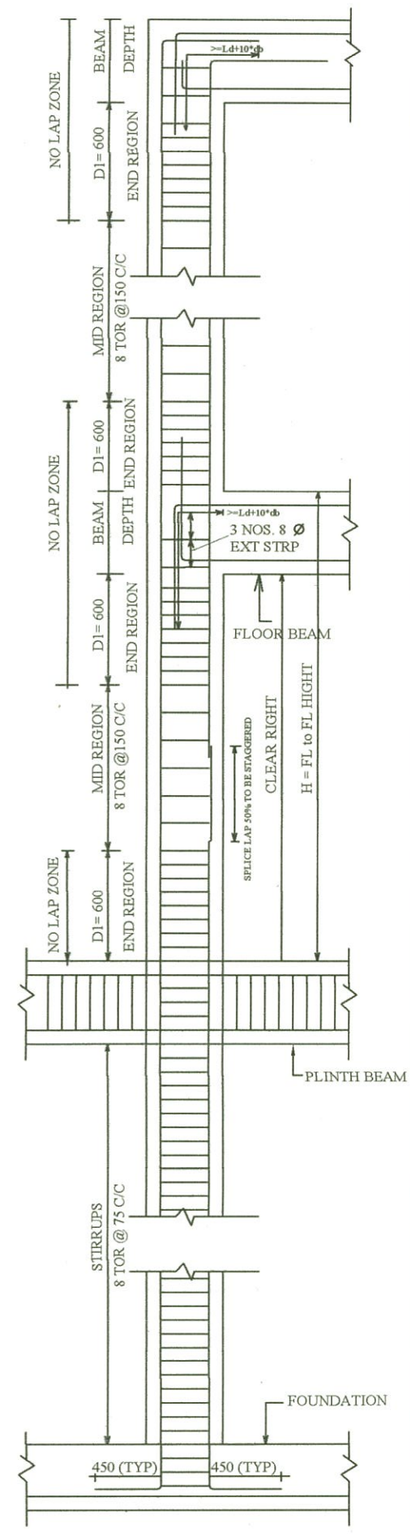

COLUMN (L) TIE AND SPLICE DETAIL

STIRRUPS END REGION 8ϕ @ 75 C/C
MID REGION 8ϕ @ 150 C/C

d_b = DIA OF BAR

	12ϕ	16ϕ	20ϕ	25ϕ	28 ϕ
Ld	550	750	950	1150	1300

DEVELOPMENT LENGTH = Ld + 10 * d_b

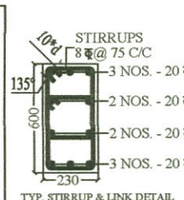

TYP. STIRRUP & LINK DETAIL
D = DIA OF STIRRUP

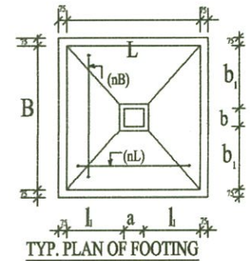

TYP. PLAN OF FOOTING

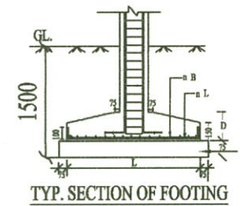

TYP. SECTION OF FOOTING

PROJECT

TYPE - I RESIDENCE FOR P.W.D. DEHRADUN.

TITLE

EXCAVATION & COLUMN LAYOUT PLAN & COLUMN DETAILS.

DRAWN	DATE	DRG. NO.	REV. NO.
SEEMA	03.10. 2012	TYPE -1- STR.-2	1

CONSULTANT :

SUNEET PRASAD
STRUCTURAL &
CONSULTING ENGINEER

Suneet Prasad.
SUNEET PRASAD
B. E., M. E. (CIVIL), M I V, F I V
AUTHORIZED STRUCTURAL ENGINEER
20, PHASE-I, ENGINEERS ENCLAVE
G.M.S. ROAD, DEHRADUN-248 001
REG. No: DoH - UK / ASE - III / 2008

Checked and approved
Gupta
SUBHASH CHANDRA GUPTA
B.E. Civil (Hon's), M. TECH. (Structure)
Reg. No. DOH-UK/ASE-VI/2008
University of Petrolium & Energy Studi

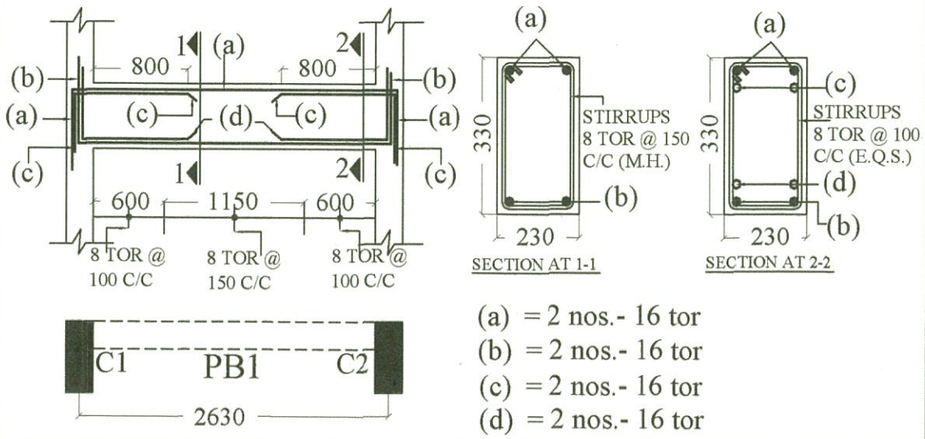

(a) = 2 nos.- 16 tor
(b) = 2 nos.- 16 tor
(c) = 2 nos.- 16 tor
(d) = 2 nos.- 16 tor

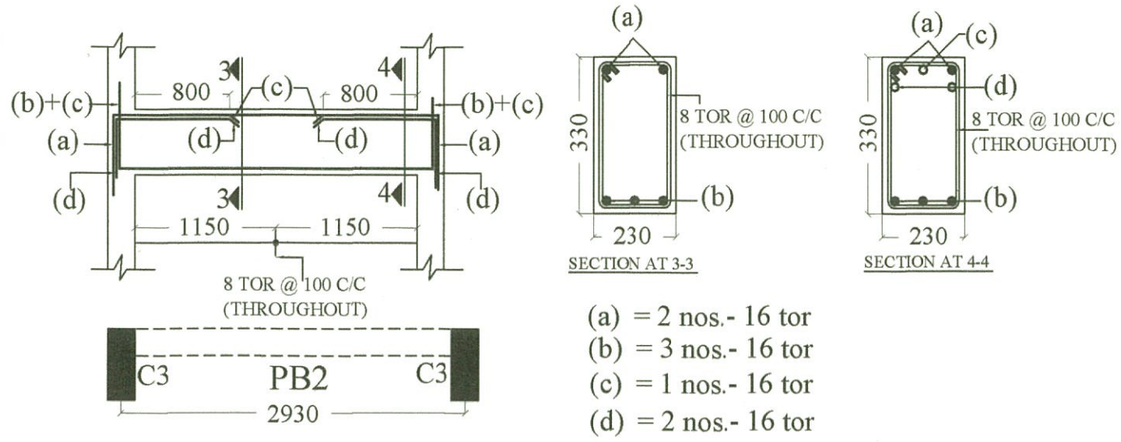

(a) = 2 nos.- 16 tor
(b) = 3 nos.- 16 tor
(c) = 1 nos.- 16 tor
(d) = 2 nos.- 16 tor

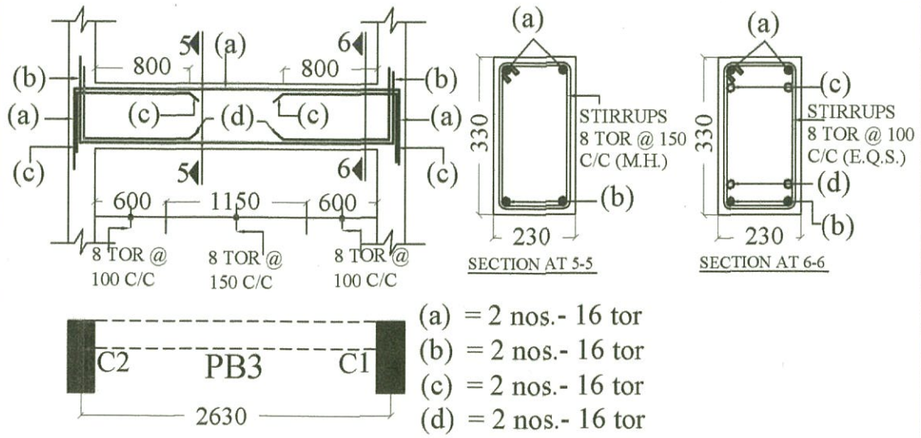

(a) = 2 nos.- 16 tor
(b) = 2 nos.- 16 tor
(c) = 2 nos.- 16 tor
(d) = 2 nos.- 16 tor

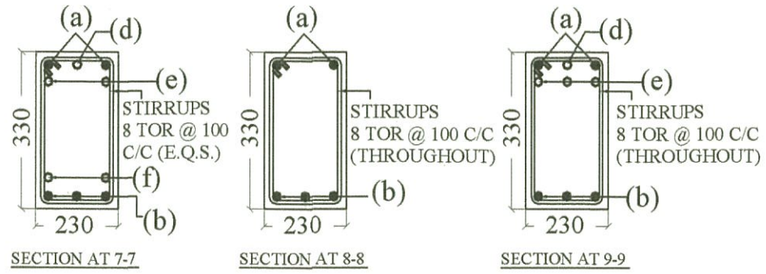

(a) = 2 nos.- 16 tor
(b) = 3 nos.- 16 tor
(c) = 1 nos.- 16 tor
(d) = 2 nos.- 16 tor
(f) = 2 nos.- 16 tor

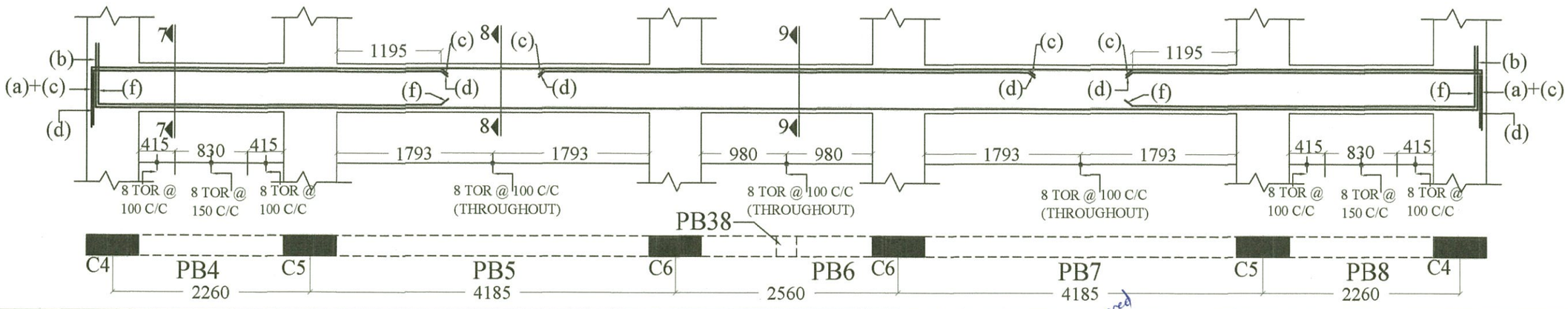

PROJECT
TYPE - I RESIDENCE FOR P.W.D. DEHRADUN.

TITLE
REINF. DETAIL OF PLINTH BEAMS

DRAWN	DATE	DRG. NO.	REV. NO.
SEEMA	03.10. 2012	TYPE -1- STR.-3	1

CONSULTANT :
SUNEET PRASAD
STRUCTURAL & CONSULTING ENGINEER
Suneet Prasad.
SUNEET PRASAD
B.E., M.E. (CIVIL), MIV, FIV
AUTHORIZED STRUCTURAL ENGINEER
20, PHASE-I, ENGINEERS ENCLAVE
G.M.S. ROAD, DEHRADUN-248 001
REG. No: DoH-UK / ASE-III / 2008

Checked and approved
SUBHASH CHANDRA GUPTA
B.E. Civil (Hon's), M. TECH. (Structure)
Reg. No. DOH-UK/ASE-VI/2008
University of Petroleum & Energy Studies

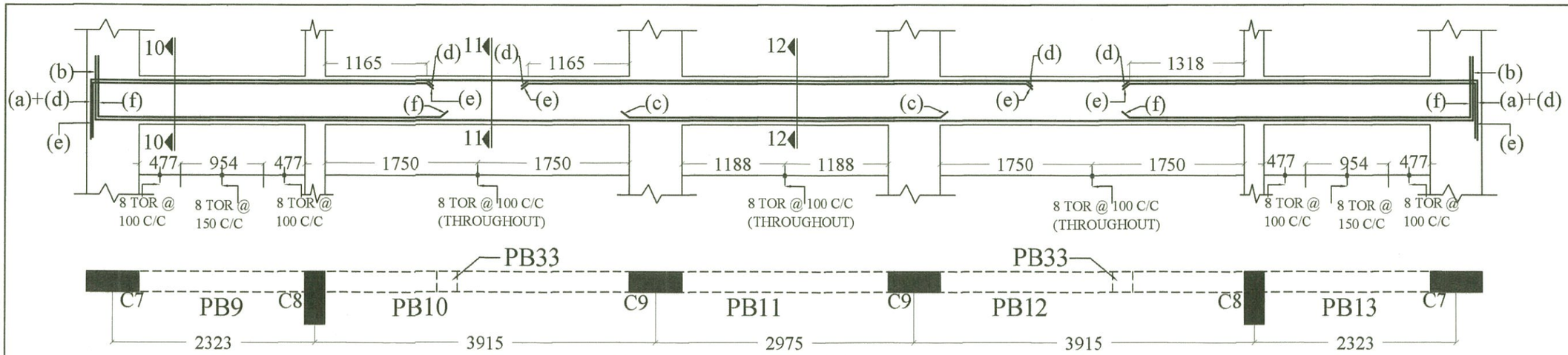

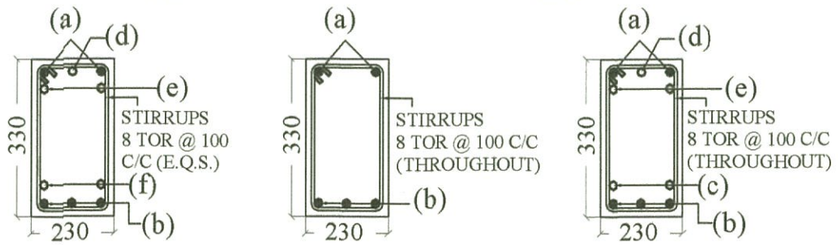

SECTION AT 10-10 SECTION AT 11-11 SECTION AT 12-12

(a) = 2 nos.- 16 tor
(b) = 3 nos.- 16 tor
(c) = 2 nos.- 12 tor
(d) = 1 nos.- 16 tor
(e) = 2 nos.- 16 tor
(f) = 2 nos.- 16 tor

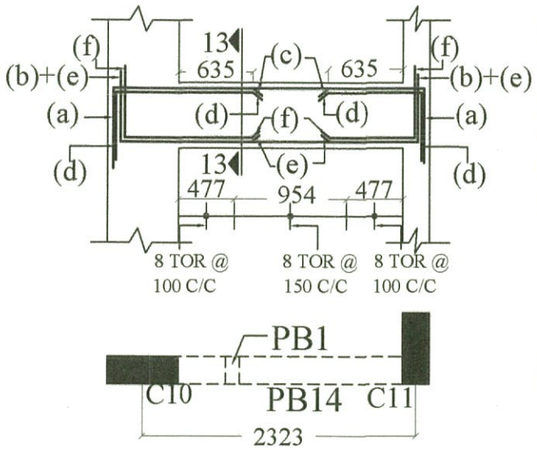

(a) = 2 nos.- 16 tor
(b) = 2 nos.- 16 tor
(c) = 1 nos.- 16 tor
(d) = 2 nos.- 16 tor
(e) = 1 nos.- 16 tor
(f) = 2 nos.- 16 tor

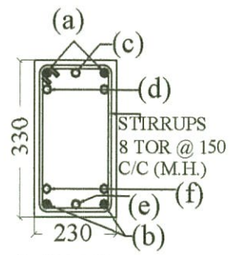

SECTION AT 13-13

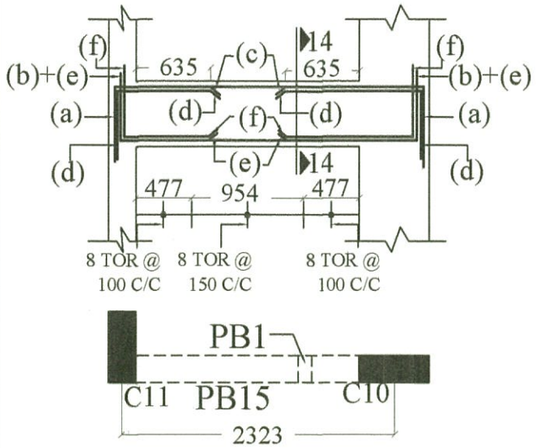

(a) = 2 nos.- 16 tor
(b) = 2 nos.- 16 tor
(c) = 1 nos.- 16 tor
(d) = 2 nos.- 16 tor
(e) = 1 nos.- 16 tor
(f) = 2 nos.- 16 tor

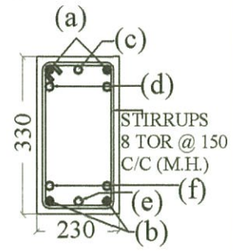

SECTION AT 14-14

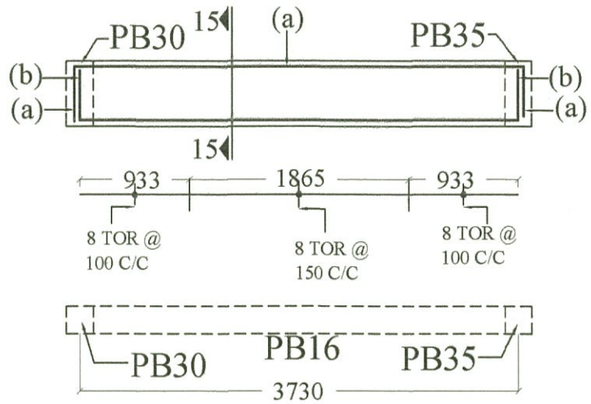

(a) = 2 nos.- 16 tor
(b) = 2 nos.- 16 tor

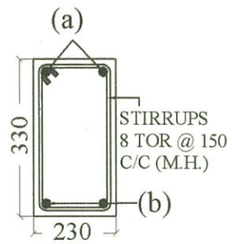

SECTION AT 15-15

PROJECT
TYPE - I RESIDENCE FOR P.W.D. DEHRADUN.

TITLE
REINF. DETAIL OF PLINTH BEAMS

DRAWN	DATE	DRG. NO.	REV. NO.
SEEMA	03.10. 2012	TYPE -1- STR.-4	1

CONSULTANT :
SUNEET PRASAD
STRUCTURAL & CONSULTING ENGINEER
Suneet Prasad.
SUNEET PRASAD
B. E., M. E. (CIVIL), M I V, F I V
AUTHORIZED STRUCTURAL ENGINEER
20, PHASE-I, ENGINEERS ENCLAVE
G.M.S. ROAD, DEHRADUN-248 001
REG. No: DoH - UK/ASE - III / 2006

Checked & approved
SUBHASH CHANDRA GUPTA
B.E. Civil (Hon's), M. TECH. (Structure)
Reg. No. DOH-UK/ASE-VI/2008
University of Petrolium & Energy Studies

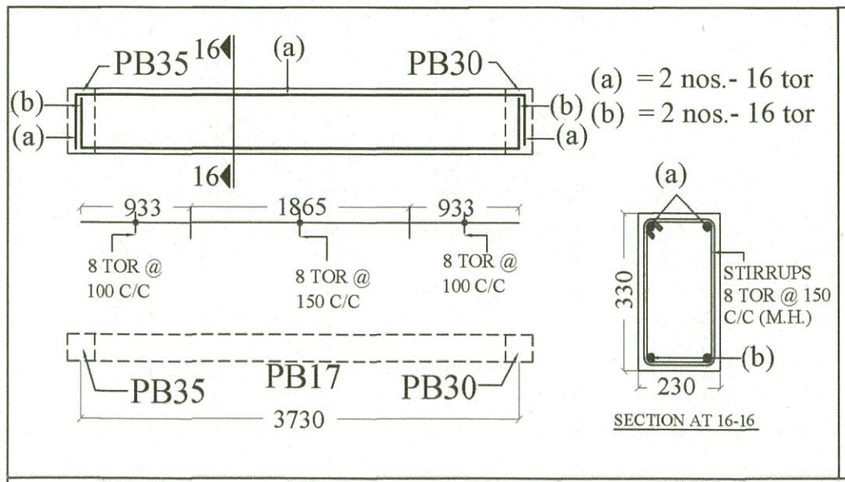

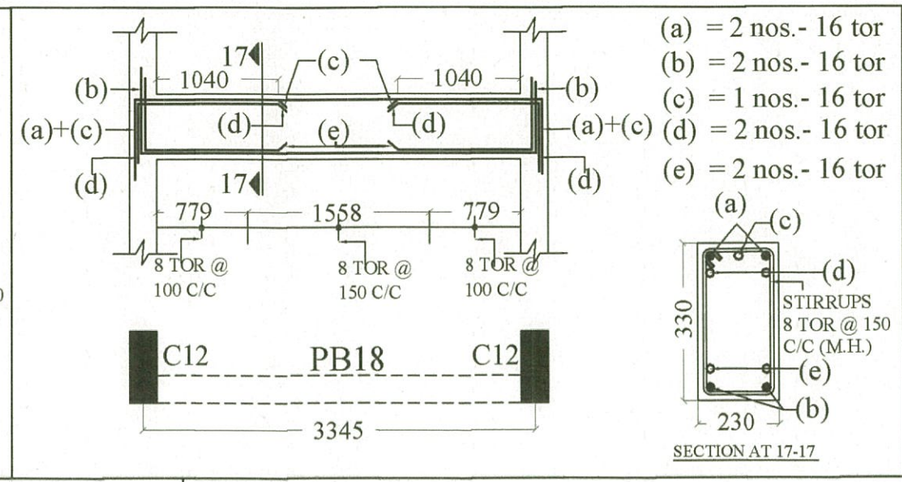

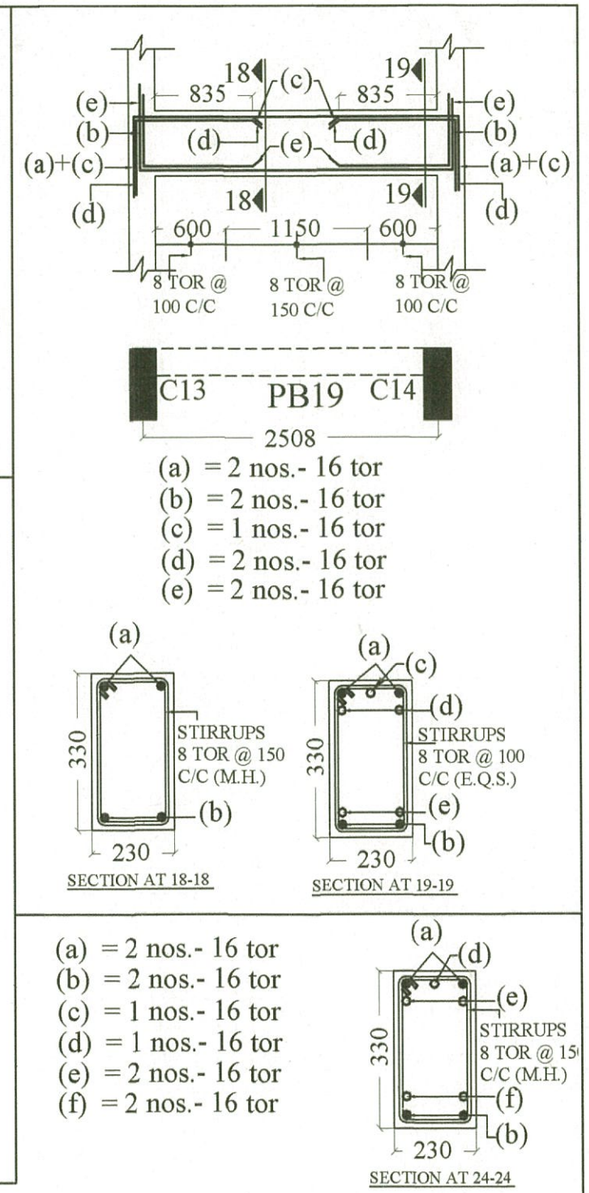

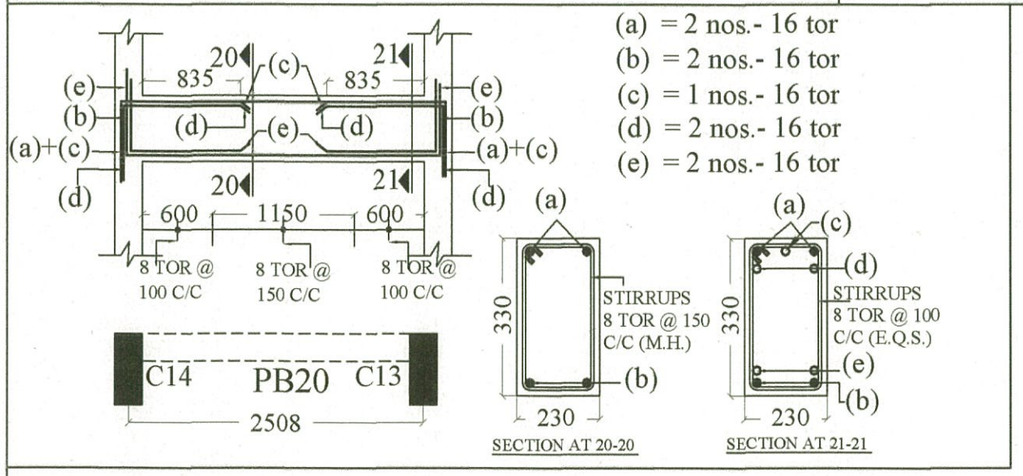

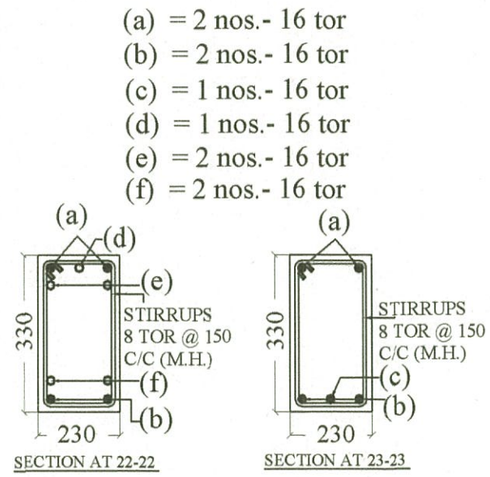

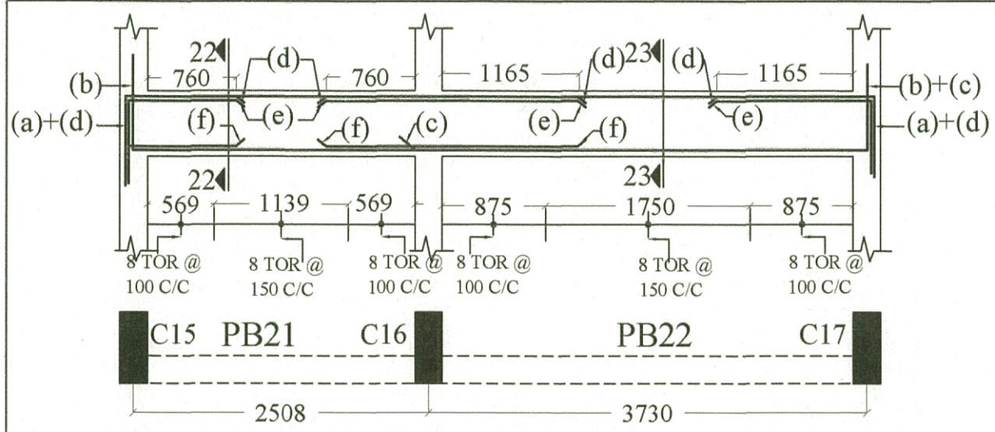

(a) = 2 nos.- 16 tor
(b) = 2 nos.- 16 tor
(c) = 1 nos.- 16 tor
(d) = 1 nos.- 16 tor
(e) = 2 nos.- 16 tor
(f) = 2 nos.- 16 tor

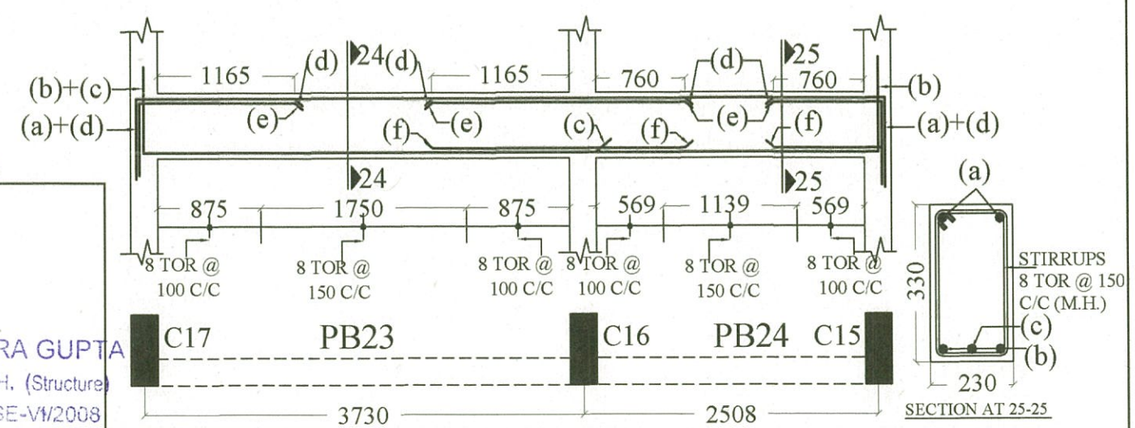

PROJECT

TYPE - I RESIDENCE FOR P.W.D. DEHRADUN.

TITLE

REINF. DETAIL OF PLINTH BEAMS

DRAWN	DATE	DRG. NO.	REV. NO.
SEEMA	03.10. 2012	TYPE -1- STR.-5	1

CONSULTANT :

SUNEET PRASAD
STRUCTURAL & CONSULTING ENGINEER

Suneet Prasad.

SUNEET PRASAD
B. E., M. E. (CIVIL), M I V, F I V
AUTHORIZED STRUCTURAL ENGINEER
20, PHASE-I, ENGINEERS ENCLAVE
G.M.S. ROAD, DEHRADUN-248 001
REG. No: DoH - UK / ASE - III / 2008

Checked and approved

SUBHASH CHANDRA GUPTA
B.E. Civil (Hon's), M. TECH. (Structure)
Reg. No. DOH-UK/ASE-VI/2008
University of Petrolium & Energy Studies

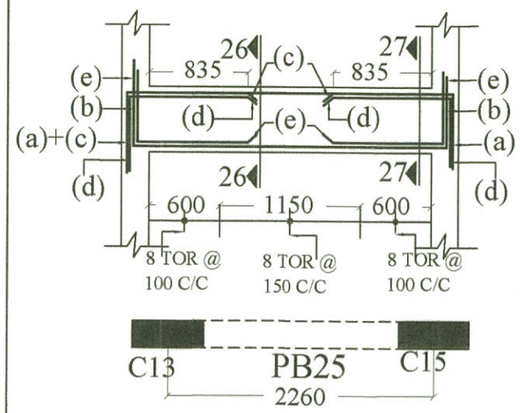

(a) = 2 nos.- 16 tor
(b) = 2 nos.- 16 tor
(c) = 2 nos.- 16 tor
(d) = 2 nos.- 16 tor
(e) = 2 nos.- 16 tor

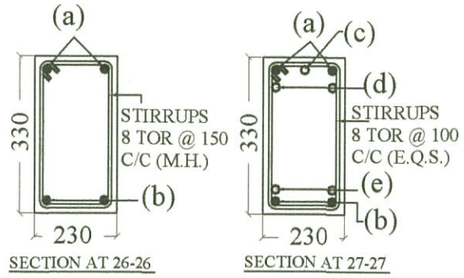

SECTION AT 26-26

SECTION AT 27-27

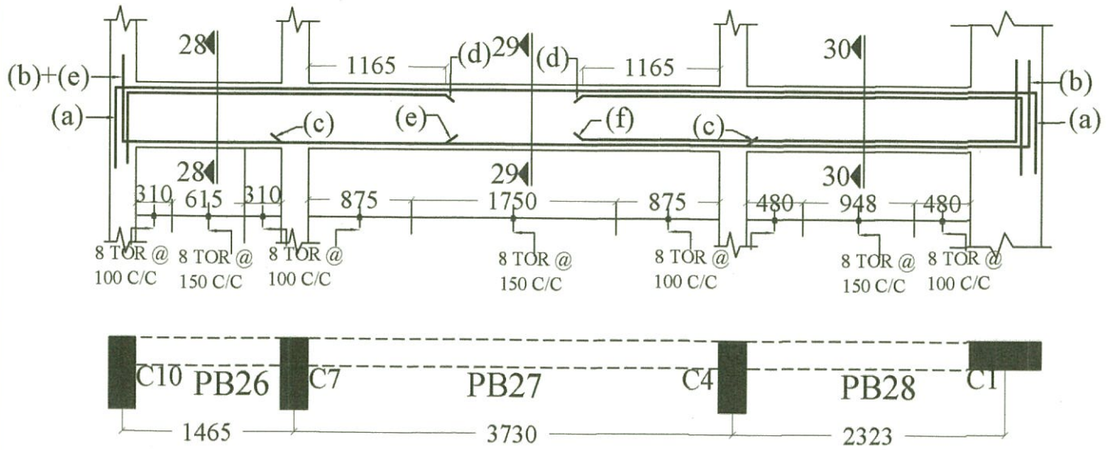

(a) = 2 nos.- 16 tor
(b) = 2 nos.- 16 tor
(c) = 1 nos.- 16 tor
(d) = 2 nos.- 16 tor
(e) = 1 nos.- 16 tor
(f) = 2 nos.- 16 tor

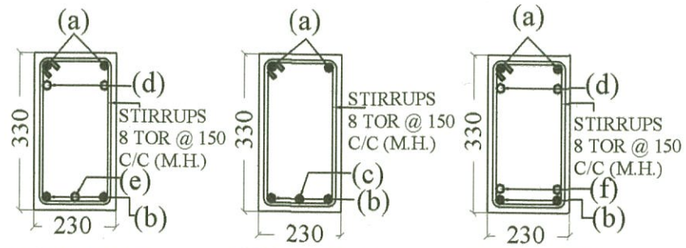

SECTION AT 28-28

SECTION AT 29-29

SECTION AT 30-30

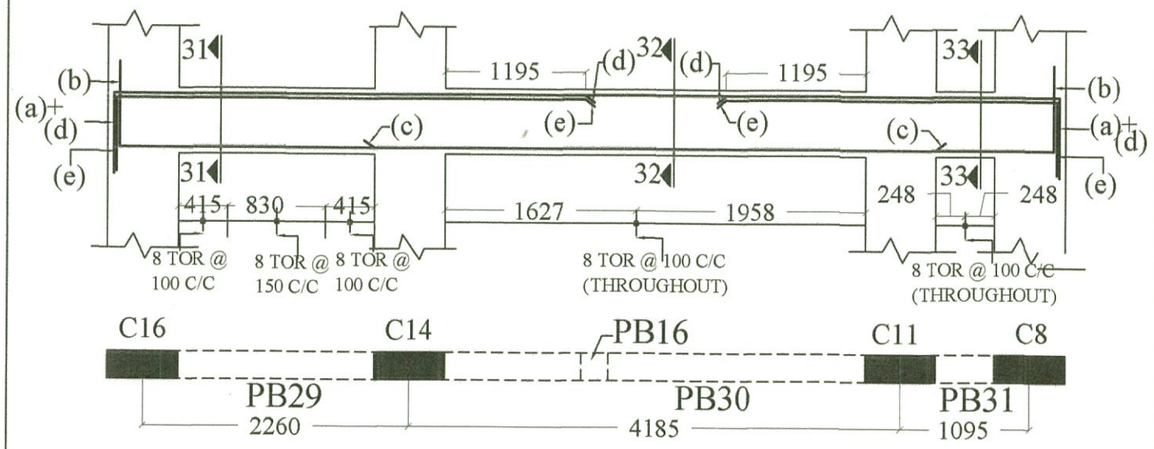

(a) = 2 nos.- 16 tor
(b) = 2 nos.- 16 tor
(c) = 1 nos.- 16 tor
(d) = 1 nos.- 16 tor
(e) = 2 nos.- 16 tor

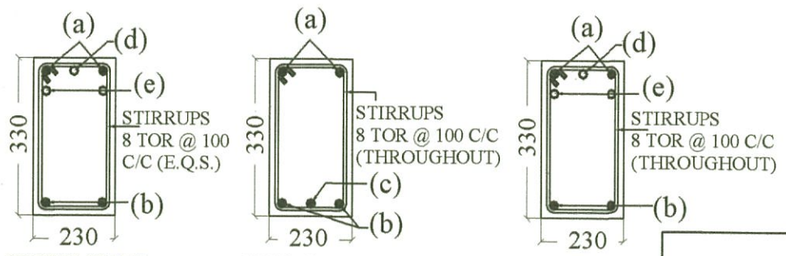

SECTION AT 31-31

SECTION AT 32-32

SECTION AT 33-33

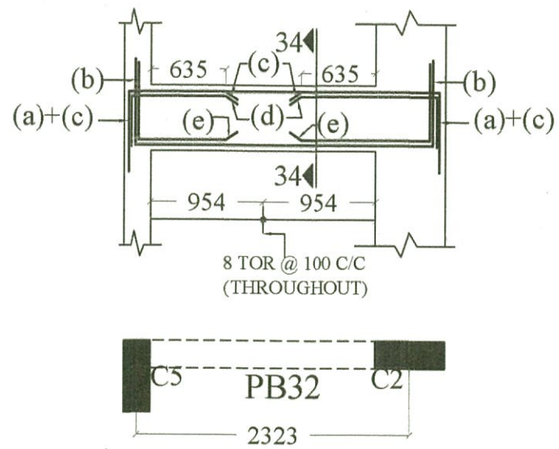

(a) = 2 nos.- 16 tor
(b) = 2 nos.- 16 tor
(c) = 1 nos.- 16 tor
(d) = 2 nos.- 16 tor
(e) = 2 nos.- 16 tor

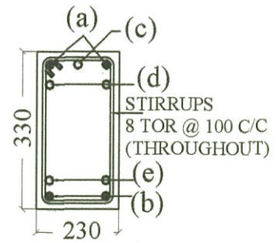

SECTION AT 34-34

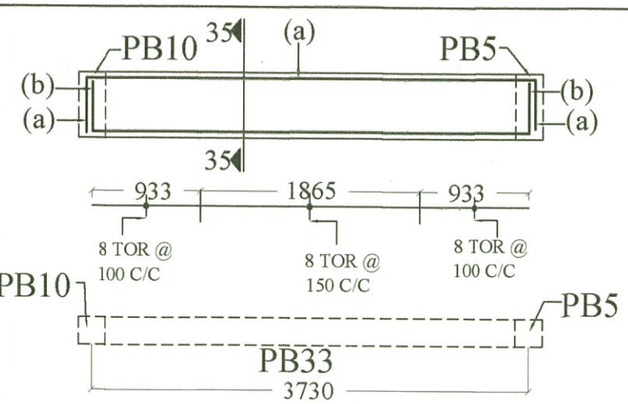

(a) = 2 nos.- 12 tor
(b) = 2 nos.- 16 tor

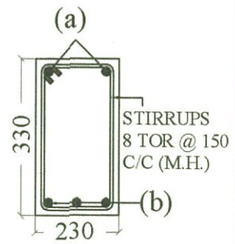

SECTION AT 35-35

PROJECT			
TYPE - I RESIDENCE FOR P.W.D. DEHRADUN.			
TITLE			
REINF. DETAIL OF PLINTH BEAMS			
DRAWN SEEMA	DATE 03.10. 2012	DRG. NO. TYPE -1- STR.-6	REV. NO. 1

CONSULTANT :

SUNEET PRASAD
STRUCTURAL & CONSULTING ENGINEER

Suneet Prasad

SUNEET PRASAD
B. E., M. E. (CIVIL), M I V, F I V
AUTHORIZED STRUCTURAL ENGINEER
20, PHASE-I, ENGINEERS ENCLAVE
G.M.S. ROAD, DEHRADUN-248 001
REG. No: DoH - UK / ASE - III / 2008

Checked and approved
Gupta

SUBHASH CHANDRA GUPTA
B.E. Civil (Hon's), M. TECH. (Structure)
Reg. No. DOH-UK/ASE-VI/2008
University of Petrolium & Energy Studies

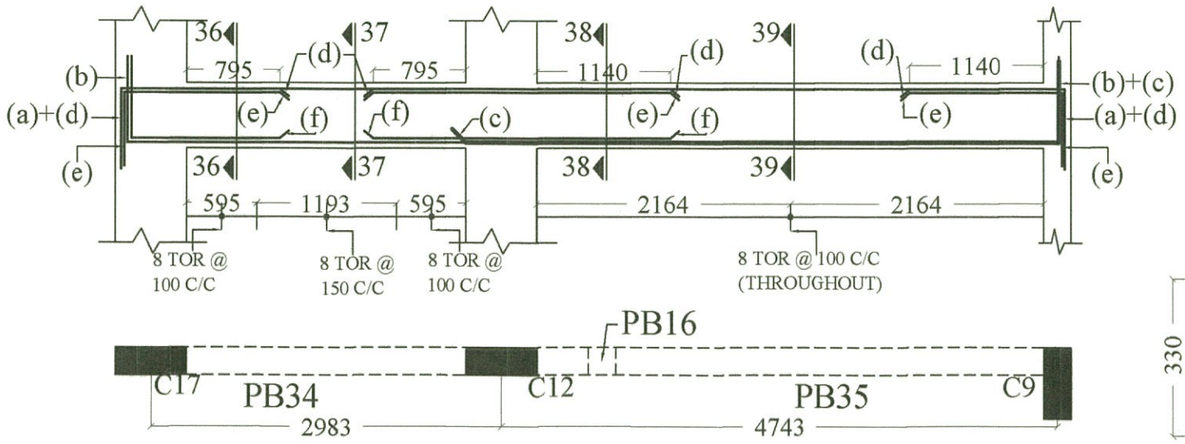

(a) = 2 nos.- 16 tor
(b) = 3 nos.- 16 tor
(c) = 1 nos.- 16 tor
(d) = 1 nos.- 16 tor
(e) = 2 nos.- 16 tor
(f) = 2 nos.- 16 tor

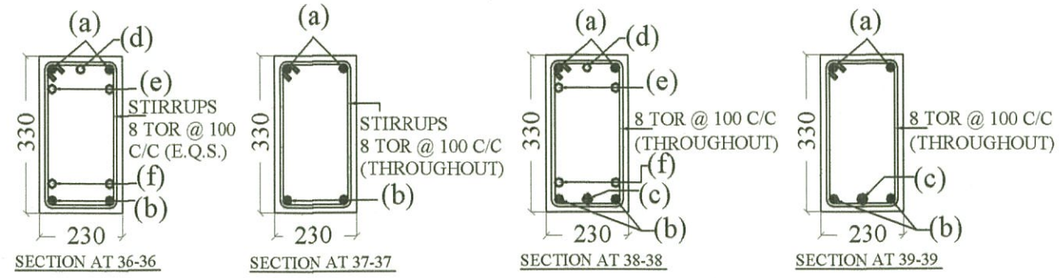

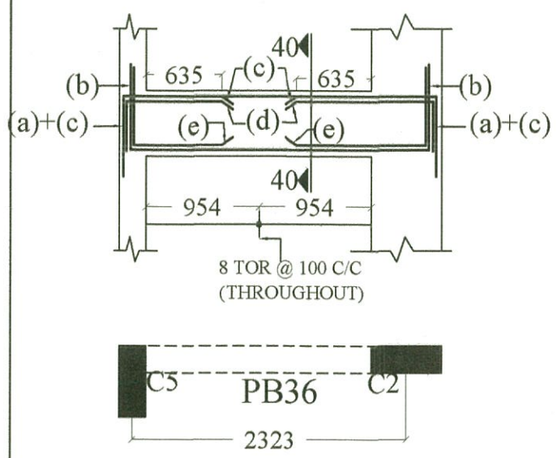

(a) = 2 nos.- 16 tor
(b) = 2 nos.- 16 tor
(c) = 1 nos.- 16 tor
(d) = 2 nos.- 16 tor
(e) = 2 nos.- 16 tor

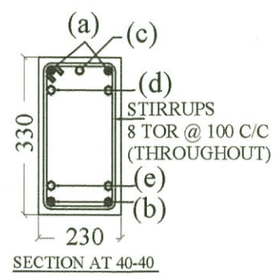

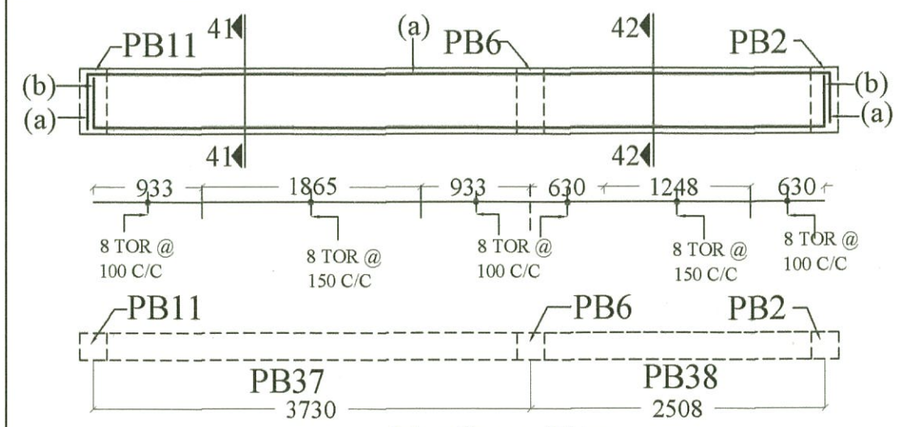

(a) = 2 nos.- 12 tor
(b) = 2 nos.- 16 tor

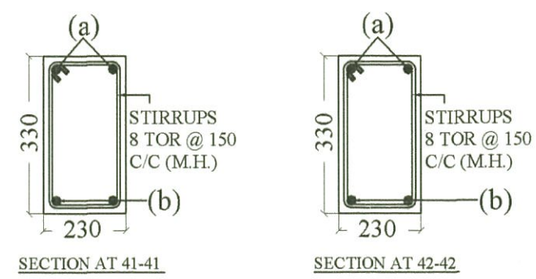

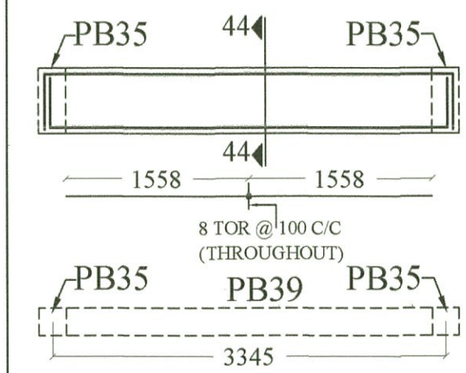

(a) = 2 nos.- 16 tor
(b) = 2 nos.- 16 tor

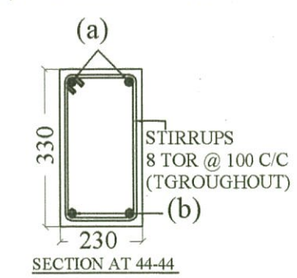

PROJECT
TYPE - I RESIDENCE FOR P.W.D. DEHRADUN.

TITLE
REINF. DETAIL OF PLINTH BEAMS

DRAWN	DATE	DRG. NO.	REV. NO.
SEEMA	03.10. 2012	TYPE -1- STR.-7	1

CONSULTANT :
SUNEET PRASAD
STRUCTURAL & CONSULTING ENGINEER

Suneet Prasad
SUNEET PRASAD
B. E., M. E. (CIVIL), M I V, F I V
AUTHORIZED STRUCTURAL ENGINEER
20, PHASE-I, ENGINEERS ENCLAVE
G.M.S. ROAD, DEHRADUN-248 001
REG. No: DoH - UK / ASE - III / 2008

Checked and approved

SUBHASH CHANDRA GUPTA
B.E. Civil (Hon's), M. TECH. (Structure)
Reg. No. DOH-UK/ASE-V/2008
University of Petrolium & Energy Studies

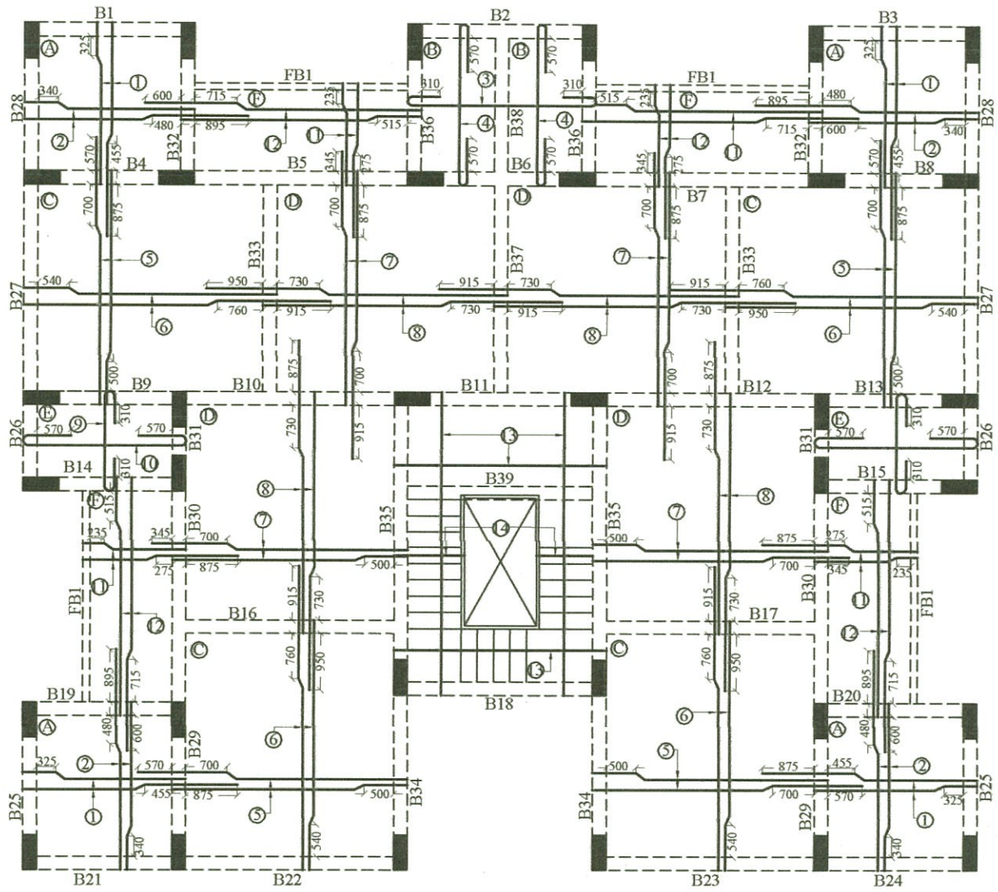

REINF. DETAIL OF FIRST & SECOND FLOOR SLAB (WITH BOTTOM BARS)

PANEL	BAR MARK	BAR DIA.	SPACING	DESCRIPTION
A (SLAB THICKNESS 110)	1	8 Φ	200C/C	BOTTOM MAIN
	2	8 Φ	200C/C	BOTTOM DIST.
B (SLAB THICKNESS 110)(SUNKIN)	3	8 Φ	200C/C	BOTTOM MAIN
	4	8 Φ	200C/C	BOTTOM DIST.
C (SLAB THICKNESS 110)	5	8 Φ	150C/C	BOTTOM MAIN
	6	8 Φ	160C/C	BOTTOM DIST.
D (SLAB THICKNESS 110)	7	8 Φ	150C/C	BOTTOM MAIN
	8	8 Φ	160C/C	BOTTOM DIST.
E (SLAB THICKNESS 110)(SUNKIN)	9	8 Φ	200C/C	BOTTOM MAIN
	10	8 Φ	200C/C	BOTTOM DIST.
F (SLAB THICKNESS 110)	11	8 Φ	175C/C	BOTTOM MAIN
	12	8 Φ	200C/C	BOTTOM DIST.
STAIRCASE (SLAB THICKNESS 110)	13	12 Φ	150C/C	BOTTOM MAIN
	14	8 Φ	150C/C	BOTTOM DIST.

PROJECT

TYPE - I RESIDENCE FOR P.W.D. DEHRADUN.

TITLE

REINF. DETAIL OF FIRST & SECOND FLOOR SLAB & BEAMS.

DRAWN	DATE	DRG. NO.	REV. NO.
SEEMA	03.10. 2012	TYPE -1- STR.-8	1

CONSULTANT :

SUNEET PRASAD
STRUCTURAL & CONSULTING ENGINEER

Suneet Prasad.
SUNEET PRASAD
B. E., M. E. (CIVIL), M I V, F I V
AUTHORIZED STRUCTURAL ENGINEER
20, PHASE-I, ENGINEERS ENCLAVE
G.M.S. ROAD, DEHRADUN-248 001
REG. No: DoH - UK / ASE - III / 2008

Checked and approved
Gupta
SUBHASH CHANDRA GUPTA
B.E. Civil (Hon's), M. TECH. (Structure)
Reg. No. DOH-UK/ASE-[illegible]
(University of Petro[illegible] Studies)

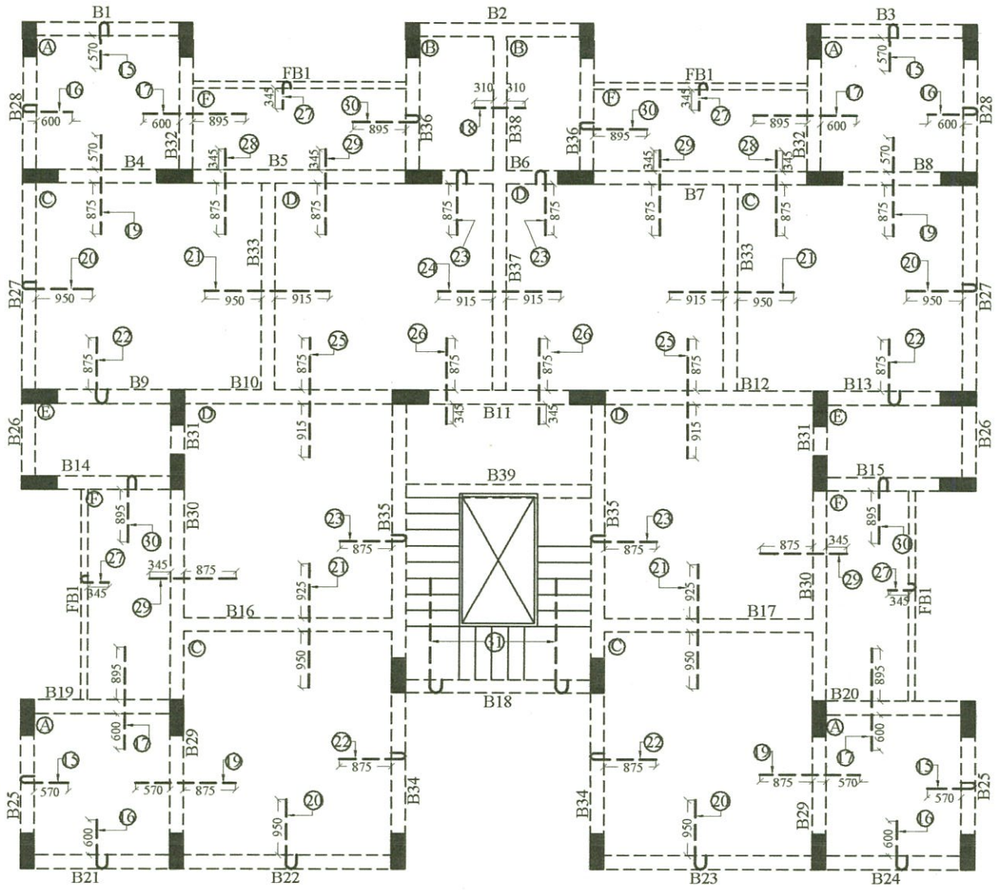

REINF. DETAIL OF FIRST & SECOND FLOOR SLAB (WITH TOP BARS)

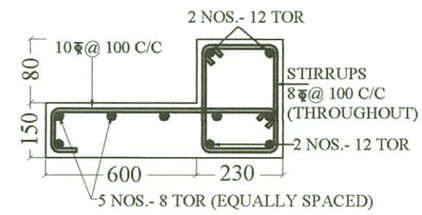

TYPICAL BEAM/ SUNSHADE DETAIL FOR OPENING UPTO 1500

ALL LINTEL BEAMS TO HAVE BBEARING OF 230 ON EITHER SIDE OPEING

BAR MARK	BAR DIA.	SPACING	DESCRIPTION
15	8 ϕ	400C/C	TOP MAIN
16	8 ϕ	400C/C	TOP MAIN
17	8 ϕ	400C/C	TOP MAIN
18	8 ϕ	200C/C	TOP MAIN
19	8 ϕ	300C/C	TOP MAIN
20	8 ϕ	320C/C	TOP MAIN
21	8 ϕ	320C/C	TOP MAIN
22	8 ϕ	300C/C	TOP MAIN
23	8 ϕ	300C/C	TOP MAIN
24	8 ϕ	320C/C	TOP MAIN
25	8 ϕ	300C/C	TOP MAIN
26	12 ϕ	150C/C	TOP MAIN
27	8 ϕ	350C/C	TOP MAIN

BAR MARK	BAR DIA.	SPACING	DESCRIPTION
28	8 ϕ	300 C/C	TOP MAIN
29	8 ϕ	300C/C	TOP MAIN
30	8 ϕ	400C/C	TOP MAIN
31	12 ϕ	150C/C	TOP MAIN

TOP DIST. 8 TOR @ 200 C/C WHERE EVER REQUIRED.

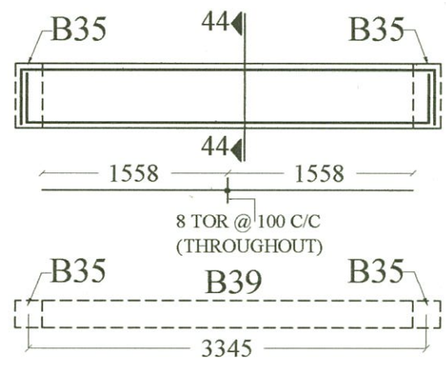

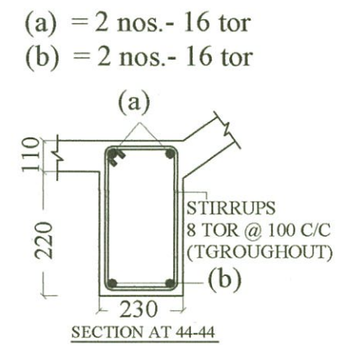

PROJECT

TYPE - I RESIDENCE FOR P.W.D. DEHRADUN.

TITLE

REINF. DETAIL OF FIRST & SECOND FLOOR SLAB & BEAMS.

DRAWN	DATE	DRG. NO.	REV. NO.
SEEMA	03.10. 2012	TYPE -1- STR.-9	1

CONSULTANT :

SUNEET PRASAD
STRUCTURAL & CONSULTING ENGINEER

Suneet Prasad.
SUNEET PRASAD
B. E., M. E. (CIVIL), M I V, F I V
AUTHORIZED STRUCTURAL ENGINEER
20, PHASE-I, ENGINEERS ENCLAVE
G.M.S. ROAD, DEHRADUN-248 001
REG. No: DoH - UK / ASE - III / 2008

Checked and approve
Gupta
SUBHASH CHANDRA GUPTA
B.E. Civil (H.n's), M. TECH. (Structure)
Reg. No. DOH-UK/ASE-VI/2008
University of Petroleum & Energy Studies

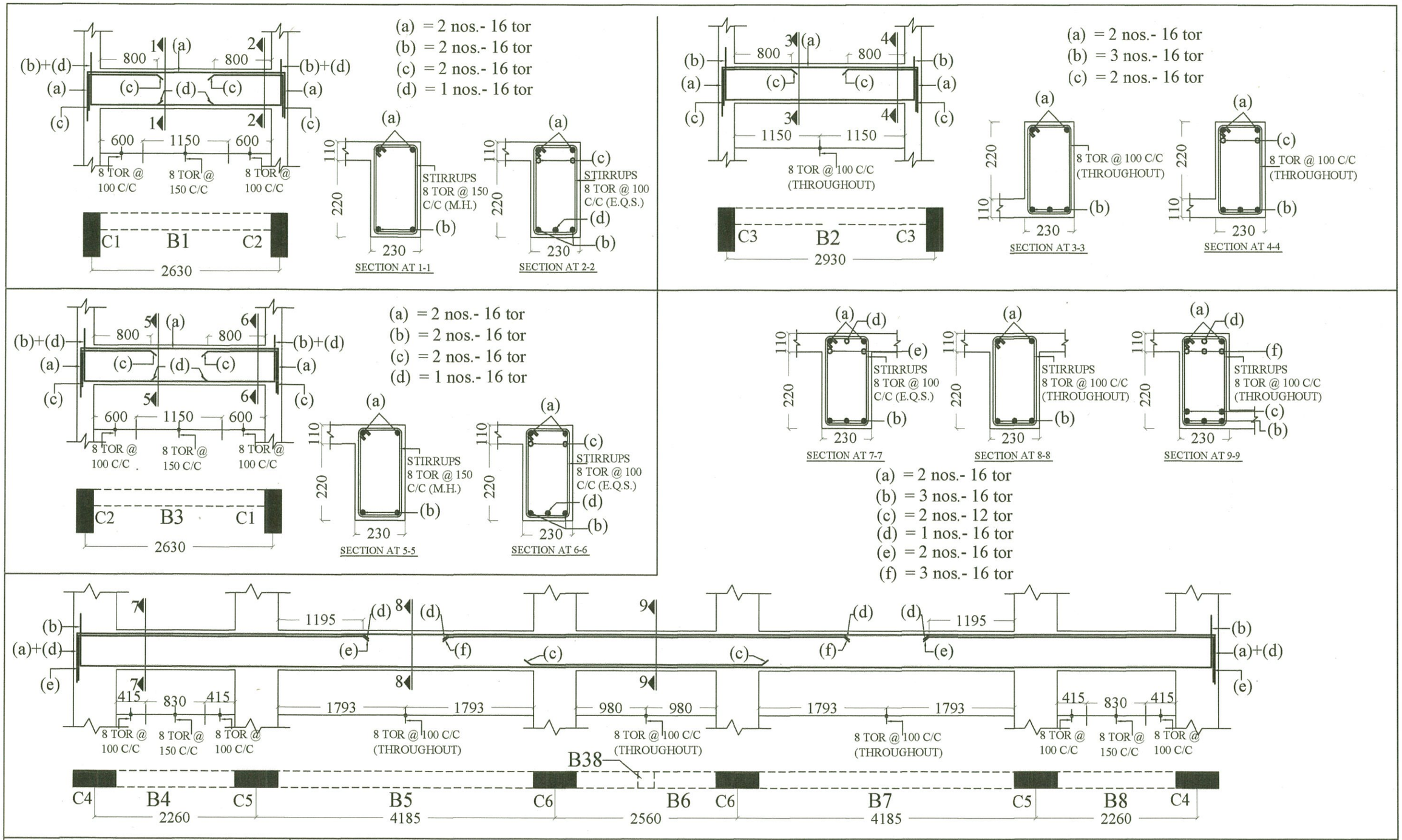

PROJECT

TYPE - I RESIDENCE FOR P.W.D. DEHRADUN.

TITLE

REINF. DETAIL OF FIRST & SECOND BEAMS.

DRAWN	DATE	DRG. NO.	REV. NO.
SEEMA	03.10. 2012	TYPE -1- STR.-10	1

CONSULTANT :

SUNEET PRASAD
STRUCTURAL & CONSULTING ENGINEER

Suneet Prasad.

SUNEET PRASAD
B. E., M. E. (CIVIL), M I V, F I V
AUTHORIZED STRUCTURAL ENGINEER
20, PHASE-I, ENGINEERS ENCLAVE
G.M.S. ROAD, DEHRADUN-248 001
REG.No: DOH - UK / ASE - III / 2008

Checked and approved

SUBHASH CHANDRA GUPTA
B.E. Civil (Hon's), M. TECH. (Structure)
Reg. No. DOH-UK/ASE-VI/2008
University of Petrolium & Energy Studies

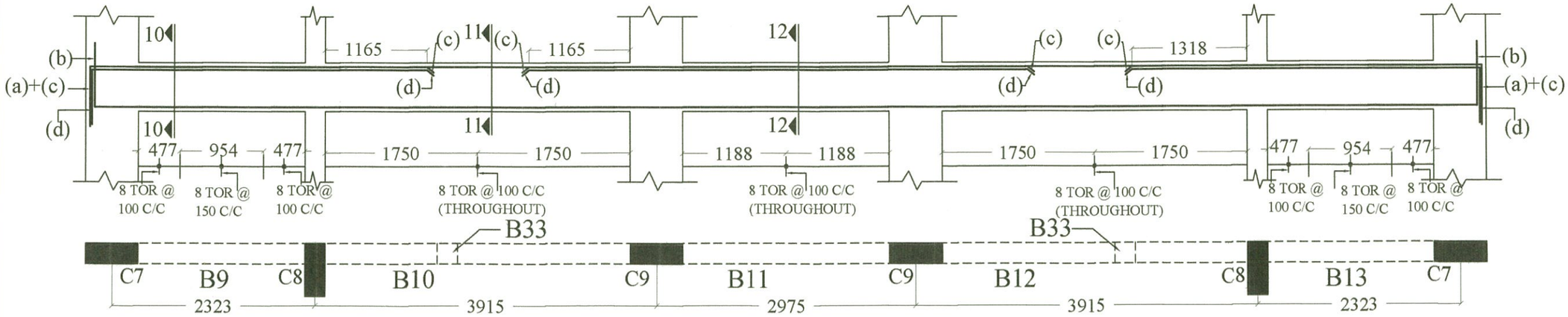

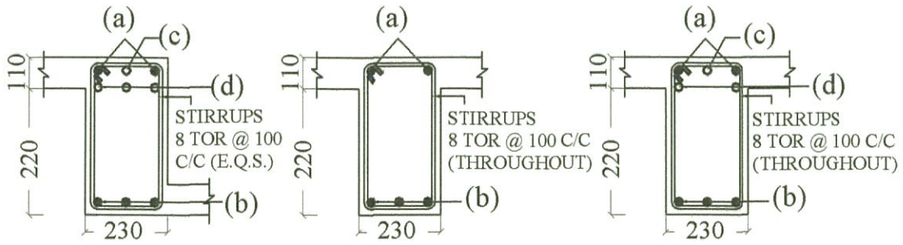

SECTION AT 10-10 SECTION AT 11-11 SECTION AT 12-12

(a) = 2 nos.- 16 tor
(b) = 3 nos.- 16 tor
(c) = 1 nos.- 16 tor
(d) = 3 nos.- 16 tor

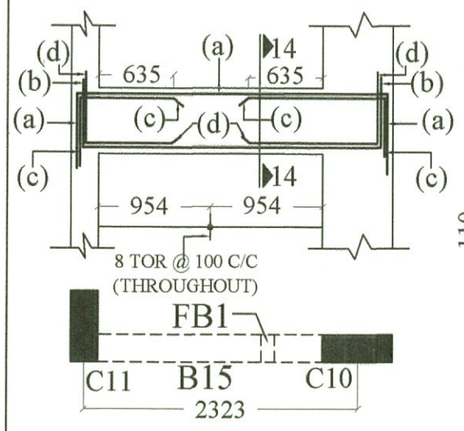

(a) = 2 nos.- 16 tor
(b) = 2 nos.- 16 tor
(c) = 2 nos.- 16 tor
(d) = 2 nos.- 16 tor

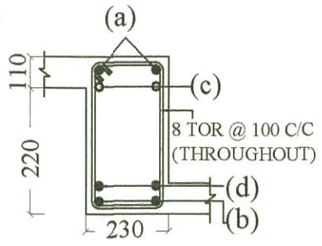

SECTION AT 14-14

(a) = 2 nos.- 16 tor
(b) = 3 nos.- 16 tor
(c) = 2 nos.- 12 tor

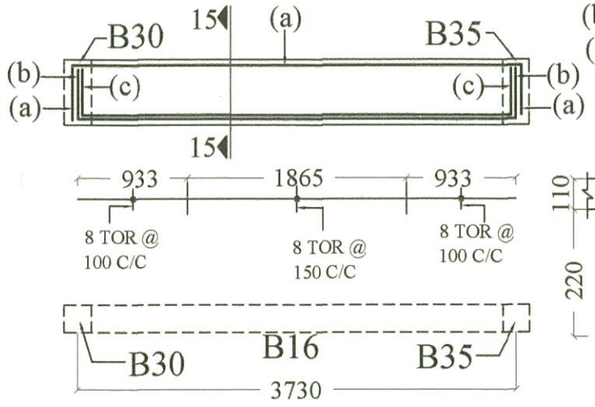

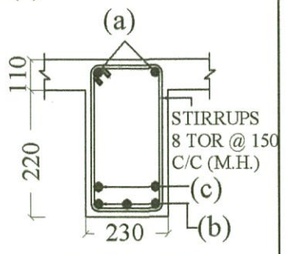

SECTION AT 15-15

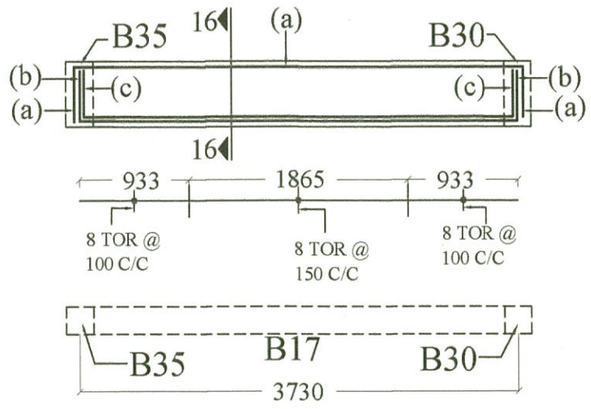

(a) = 2 nos.- 16 tor
(b) = 3 nos.- 16 tor
(c) = 2 nos.- 12 tor

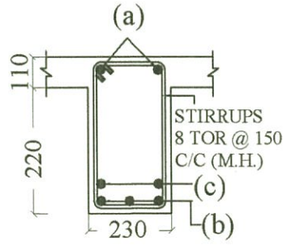

SECTION AT 16-16

PROJECT
TYPE - I RESIDENCE FOR P.W.D. DEHRADUN.

TITLE
REINF. DETAIL OF FIRST & SECOND BEAMS.

DRAWN	DATE	DRG. NO.	REV. NO.
SEEMA	03.10. 2012	TYPE -1- STR.-11	1

CONSULTANT :
SUNEET PRASAD
STRUCTURAL & CONSULTING ENGINEER

Suneet Prasad.
SUNEET PRASAD
B. E., M. E. (CIVIL), M I V, F I V
AUTHORIZED STRUCTURAL ENGINEER
20, PHASE-I, ENGINEERS ENCLAVE
G.M.S. ROAD, DEHRADUN-248 001
REG.No: DoH - UK / ASE - III / 2008

Checked and approve
SUBHASH CHANDRA GUPTA
B.E. Civil (Hon's), M. TECH. (Structure)
Reg. No. DOH-UK/ASE-VI/2008
University of Petrolium & Energy Studies

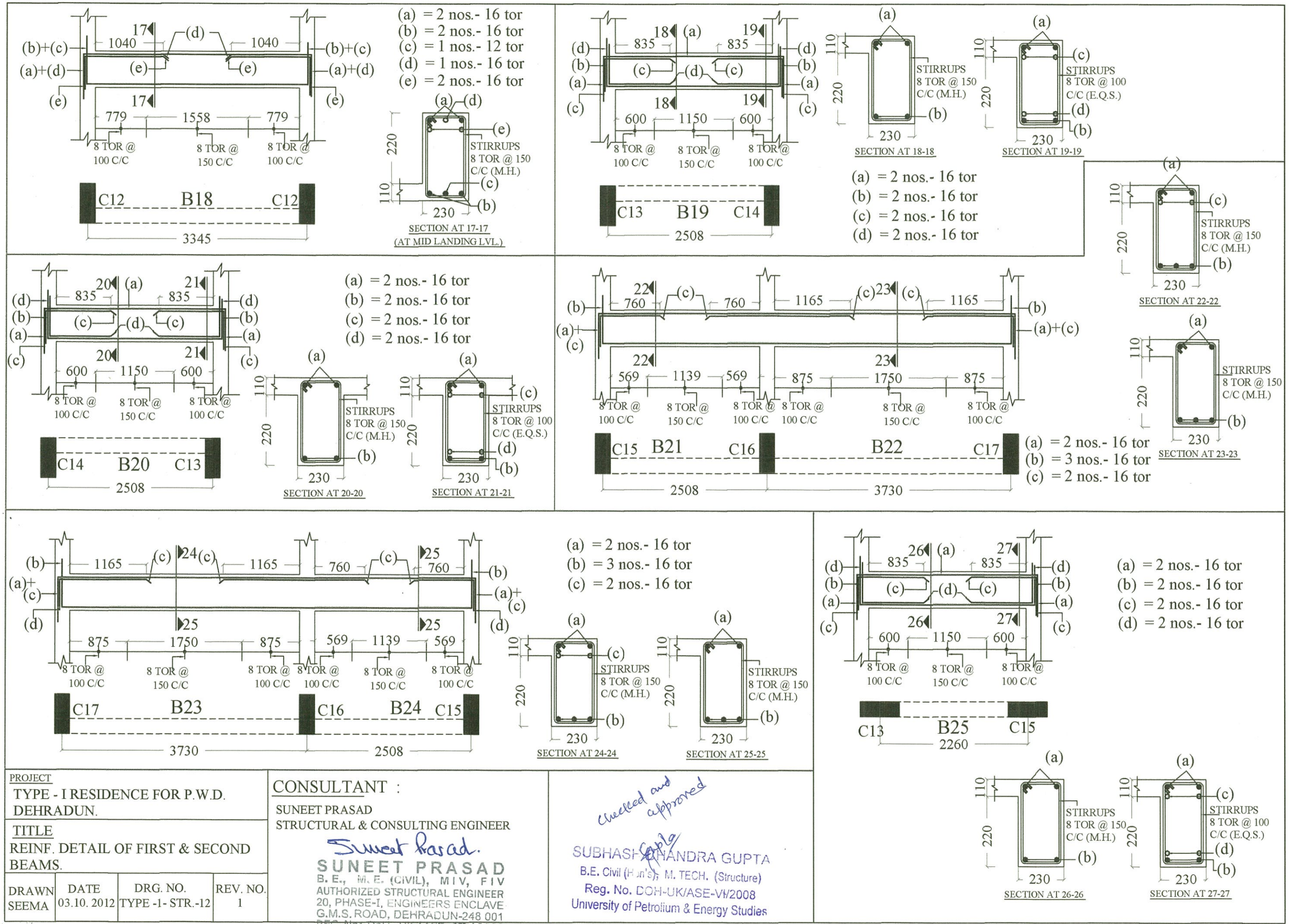

PROJECT
TYPE - I RESIDENCE FOR P.W.D. DEHRADUN.

TITLE
REINF. DETAIL OF FIRST & SECOND BEAMS.

DRAWN	DATE	DRG. NO.	REV. NO.
SEEMA	03.10. 2012	TYPE -1- STR.-12	1

CONSULTANT :
SUNEET PRASAD
STRUCTURAL & CONSULTING ENGINEER
Suneet Prasad.
SUNEET PRASAD
B. E., M. E. (CIVIL), M I V, F I V
AUTHORIZED STRUCTURAL ENGINEER
20, PHASE-I, ENGINEERS ENCLAVE
G.M.S. ROAD, DEHRADUN-248 001
REG. No: DOH - UK / ASE - III / 2008

Checked and approved
SUBHASH CHANDRA GUPTA
B.E. Civil (Hons), M. TECH. (Structure)
Reg. No. DOH-UK/ASE-VI/2008
University of Petrolium & Energy Studies

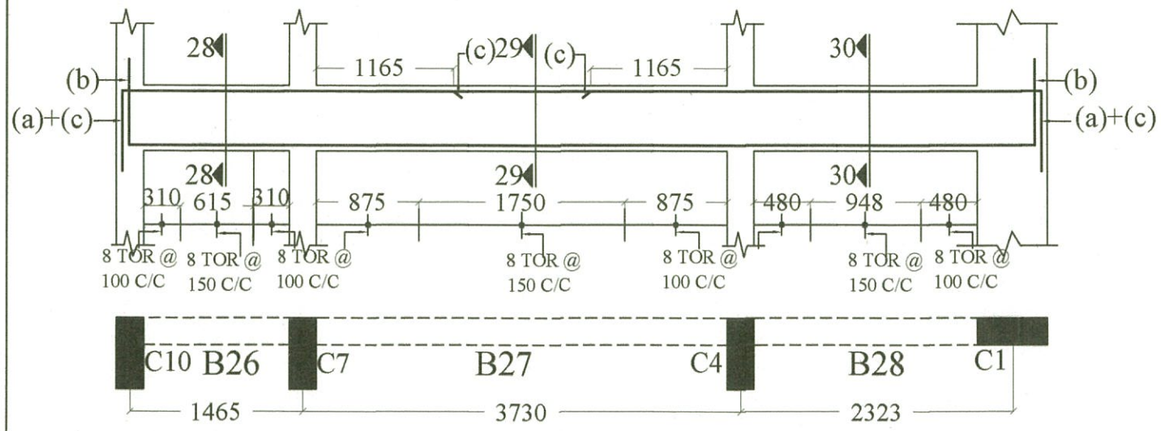

(a) = 2 nos.- 16 tor
(b) = 3 nos.- 16 tor
(c) = 1 nos.- 16 tor

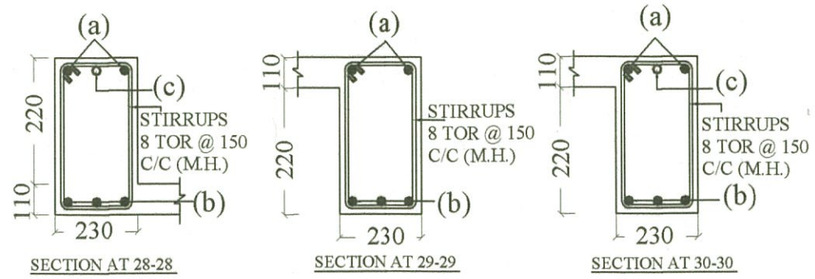

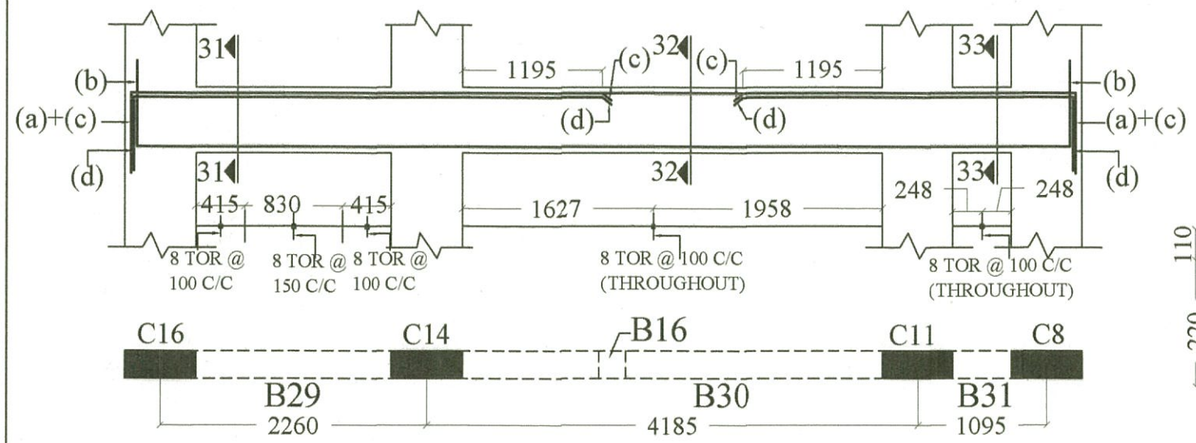

(a) = 2 nos.- 16 tor
(b) = 3 nos.- 16 tor
(c) = 1 nos.- 16 tor
(d) = 2 nos.- 16 tor

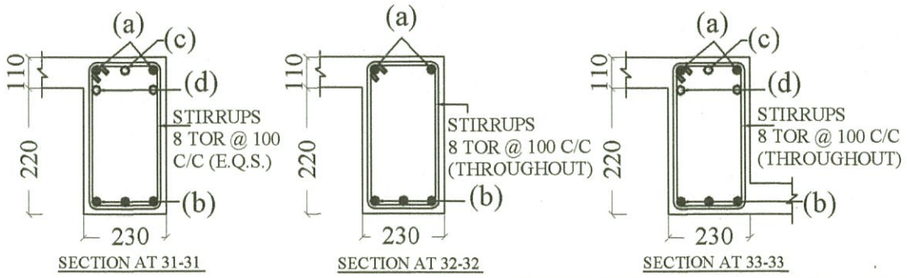

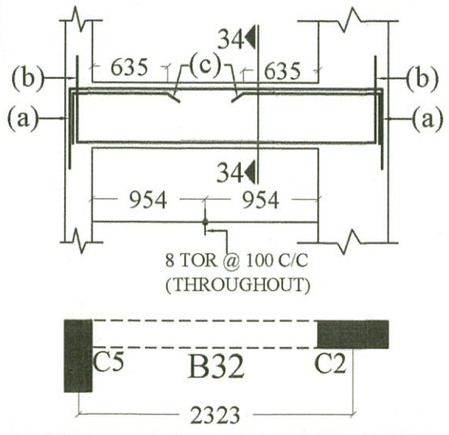

(a) = 2 nos.- 16 tor
(b) = 3 nos.- 16 tor
(c) = 2 nos.- 16 tor

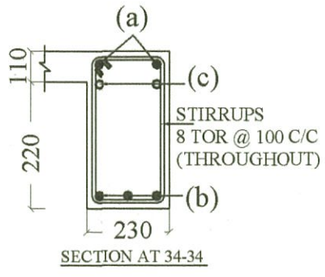

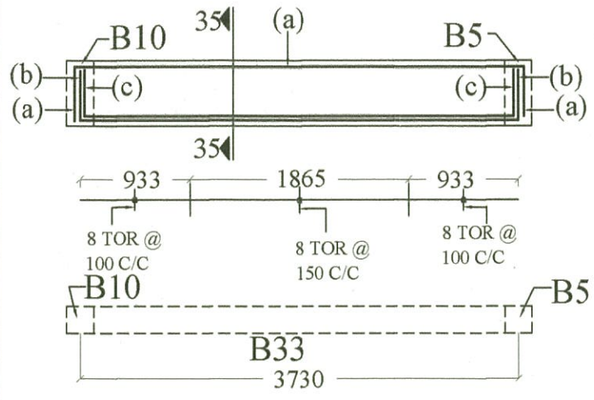

(a) = 2 nos.- 16 tor
(b) = 3 nos.- 16 tor
(c) = 2 nos.- 12 tor

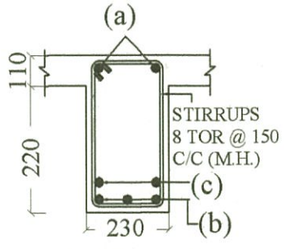

PROJECT
TYPE - I RESIDENCE FOR P.W.D. DEHRADUN.

TITLE
REINF. DETAIL OF FIRST & SECOND BEAMS.

DRAWN	DATE	DRG. NO.	REV. NO.
SEEMA	03.10. 2012	TYPE -1- STR.-13	1

CONSULTANT :
SUNEET PRASAD
STRUCTURAL & CONSULTING ENGINEER
Suneet Prasad.
SUNEET PRASAD
B. E., M. E. (CIVIL), M I V, F I V
AUTHORIZED STRUCTURAL ENGINEER
20, PHASE-I, ENGINEERS ENCLAVE
G.M.S. ROAD, DEHRADUN-248 001
REG. No: DoH - UK / ASE - III / 2008

Checked and approve
Gupta
SUBHASH CHANDRA GUPTA
B.E. Civil (Hon's), M. TECH. (Structure)
Reg. No. DOH-UK/ASE-VI/2008
University of Petrolium & Energy Studies

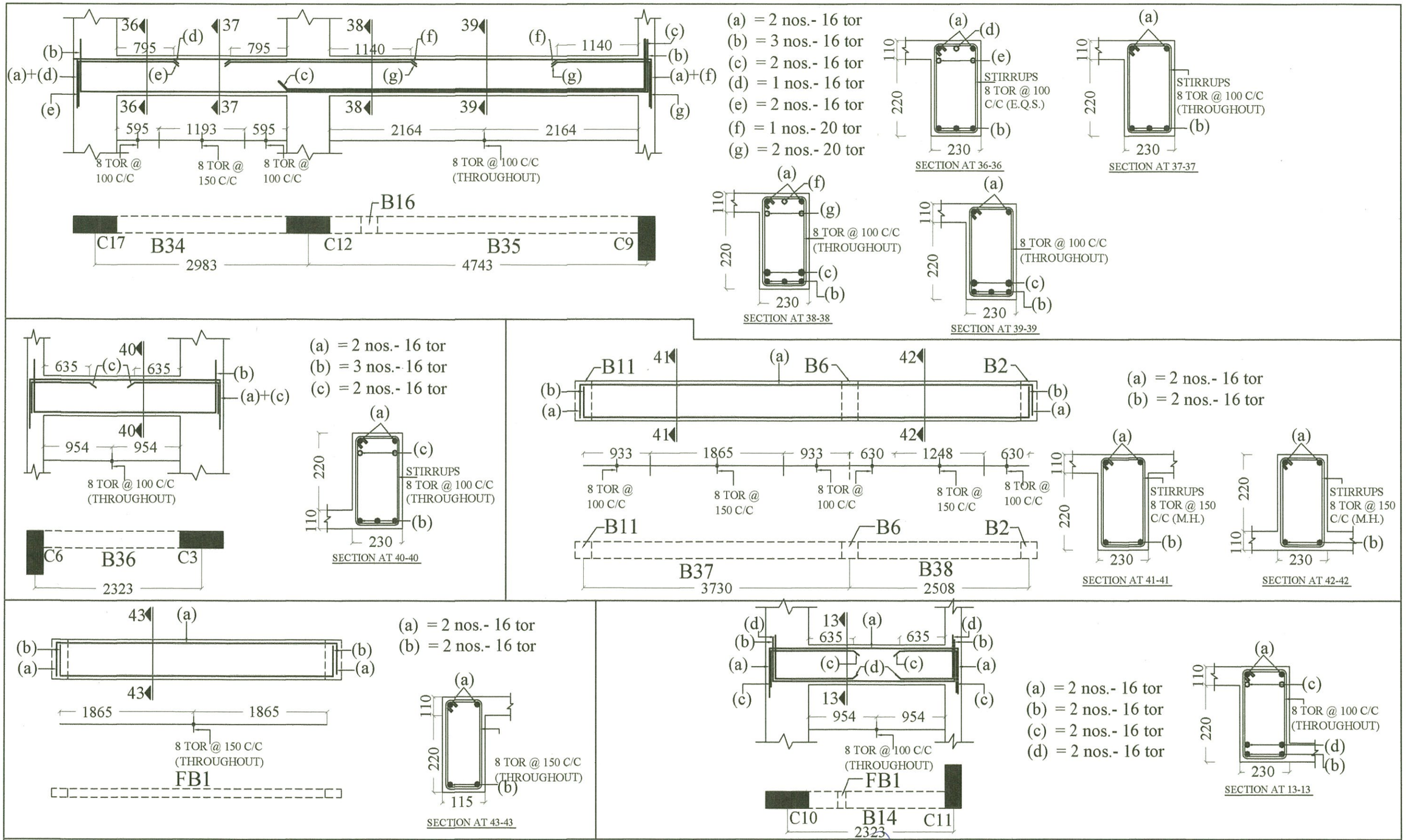

PROJECT

TYPE - I RESIDENCE FOR P.W.D. DEHRADUN.

TITLE

REINF. DETAIL OF FIRST & SECOND BEAMS.

DRAWN	DATE	DRG. NO.	REV. NO.
SEEMA	03.10. 2012	TYPE -1- STR.-14	1

CONSULTANT :

SUNEET PRASAD
STRUCTURAL & CONSULTING ENGINEER

Suneet Prasad.

SUNEET PRASAD
B. E., M. E. (CIVIL), MIV, FIV
AUTHORIZED STRUCTURAL ENGINEER
20, PHASE-I, ENGINEERS ENCLAVE
G.M.S. ROAD, DEHRADUN-248 001
REG. No: DoH - UK / ASE - III / 2008

Checked and approved
Gupta

SUBHASH CHANDRA GUPTA
B.E. Civil (Hon's), M. TECH. (Structure)
Reg. No. DOH-UK/ASE-VI/2008
University of Petrolium & Energy Studies

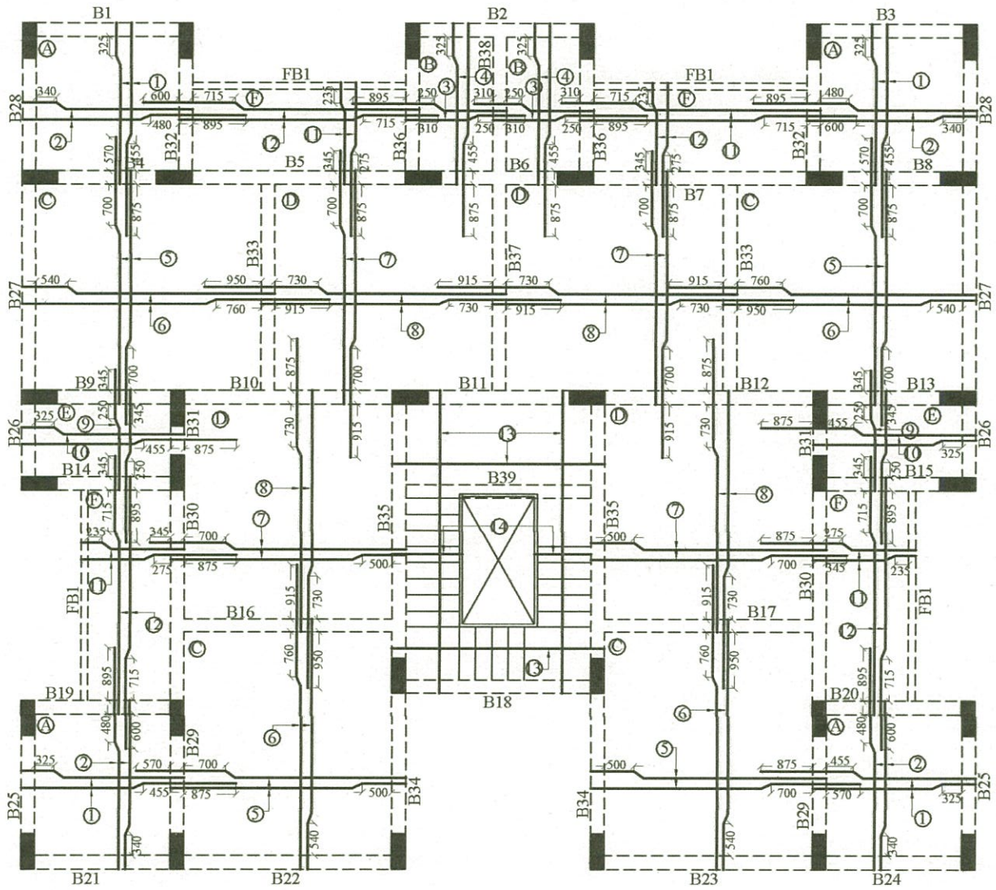

REINF. DETAIL OF ROOF SLAB (WITH BOTTOM BARS)

PANEL	BAR MARK	BAR DIA.	SPACING	DESCRIPTION
A (SLAB THICKNESS 110)	1	8 Φ	200C/C	BOTTOM MAIN
	2	8 Φ	200C/C	BOTTOM DIST.
B (SLAB THICKNESS 110)	3	8 Φ	200C/C	BOTTOM MAIN
	4	8 Φ	200C/C	BOTTOM DIST.
C (SLAB THICKNESS 110)	5	8 Φ	150C/C	BOTTOM MAIN
	6	8 Φ	160C/C	BOTTOM DIST.
D (SLAB THICKNESS 110)	7	8 Φ	150C/C	BOTTOM MAIN
	8	8 Φ	160C/C	BOTTOM DIST.
E (SLAB THICKNESS 110)	9	8 Φ	200C/C	BOTTOM MAIN
	10	8 Φ	200C/C	BOTTOM DIST.
F (SLAB THICKNESS 110)	11	8 Φ	175C/C	BOTTOM MAIN
	12	8 Φ	200C/C	BOTTOM DIST.
STAIRCASE (SLAB THICKNESS 110)	13	12 Φ	150C/C	BOTTOM MAIN
	14	8 Φ	150C/C	BOTTOM DIST.

PROJECT

TYPE - I RESIDENCE FOR P.W.D. DEHRADUN.

TITLE

REINF. DETAIL OF ROOF SLAB & BEAMS.

DRAWN	DATE	DRG. NO.	REV. NO.
SEEMA	03.10. 2012	TYPE -1- STR.-15	1

CONSULTANT :

SUNEET PRASAD
STRUCTURAL & CONSULTING ENGINEER

Suneet Prasad.
SUNEET PRASAD
B. E., M. E. (CIVIL), M I V, F I V
AUTHORIZED STRUCTURAL ENGINEER
20, PHASE-I, ENGINEERS ENCLAVE
G.M.S. ROAD, DEHRADUN-248 001
REG. No: DoH - UK / ASE - III / 2008

Checked and approved
Gupta

SUBHASH CHANDRA GUPTA
B.E. Civil (Hon's), M. TECH. (Structure)
Reg. No. DOH-UK/ASE-VI/2008
University of Petroleum & Energy Studies

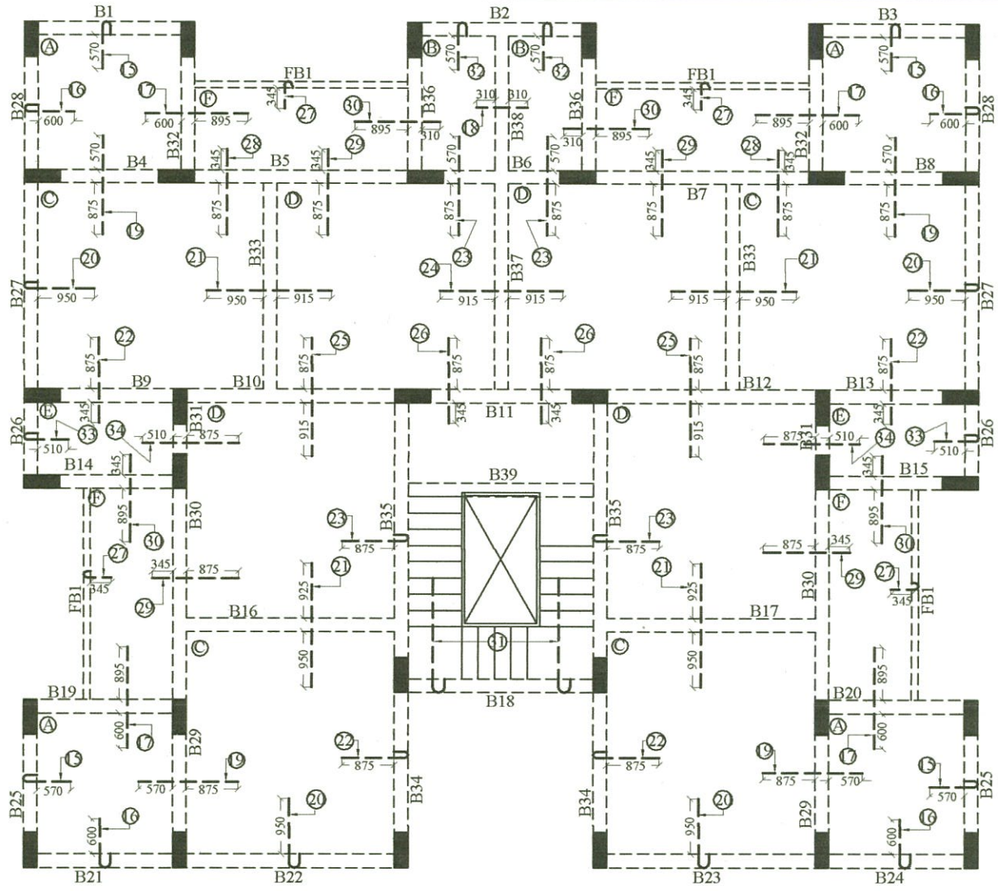

REINF. DETAIL OF ROOF SLAB (WITH TOP BARS)

BAR MARK	BAR DIA.	SPACING	DESCRIPTION
15	8 Φ	400C/C	TOP MAIN
16	8 Φ	400C/C	TOP MAIN
17	8 Φ	400C/C	TOP MAIN
18	8 Φ	400C/C	TOP MAIN
19	8 Φ	300C/C	TOP MAIN
20	8 Φ	320C/C	TOP MAIN
21	8 Φ	320C/C	TOP MAIN
22	8 Φ	300C/C	TOP MAIN
23	8 Φ	300C/C	TOP MAIN
24	8 Φ	320C/C	TOP MAIN
25	8 Φ	300C/C	TOP MAIN
26	12 Φ	150C/C	TOP MAIN
27	8 Φ	350C/C	TOP MAIN
28	8 Φ	300 C/C	TOP MAIN

BAR MARK	BAR DIA.	SPACING	DESCRIPTION
29	8 Φ	300C/C	TOP MAIN
30	8 Φ	400C/C	TOP MAIN
31	12 Φ	150C/C	TOP MAIN
32	8 Φ	400C/C	TOP MAIN
33	8 Φ	400C/C	TOP MAIN
34	8 Φ	300C/C	TOP MAIN

TOP DIST. 8 TOR @ 200 C/C WHERE EVER REQUIRED.

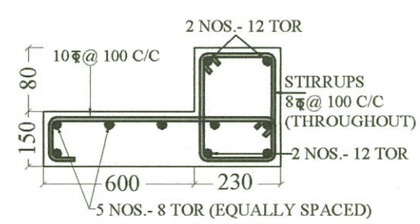

TYPICAL BEAM/ SUNSHADE DETAIL
FOR OPENING UPTO 1500

ALL LINTEL BEAMS TO HAVE BBEARING OF
230 ON EITHER SIDE OPEING

PROJECT

TYPE - I RESIDENCE FOR P.W.D.
DEHRADUN.

TITLE

REINF. DETAIL OF ROOF SLAB & BEAMS.

DRAWN	DATE	DRG. NO.	REV. NO.
SEEMA	03.10. 2012	TYPE -1- STR.-16	1

CONSULTANT :

SUNEET PRASAD
STRUCTURAL & CONSULTING ENGINEER

Suneet Prasad.
SUNEET PRASAD
B. E., M. E. (CIVIL), M I V, F I V
AUTHORIZED STRUCTURAL ENGINEER
20, PHASE-I, ENGINEERS ENCLAVE
G.M.S. ROAD, DEHRADUN-248 001
REG. No: DoH - UK / ASE - III / 2008

Checked and approve

SUBHASH CHANDRA GUPTA
B.E. Civil (Hon's), M. TECH. (Structure)
Reg. No. DOH-UK/ASE-VI/2008
University of Petroleum & Energy Studies

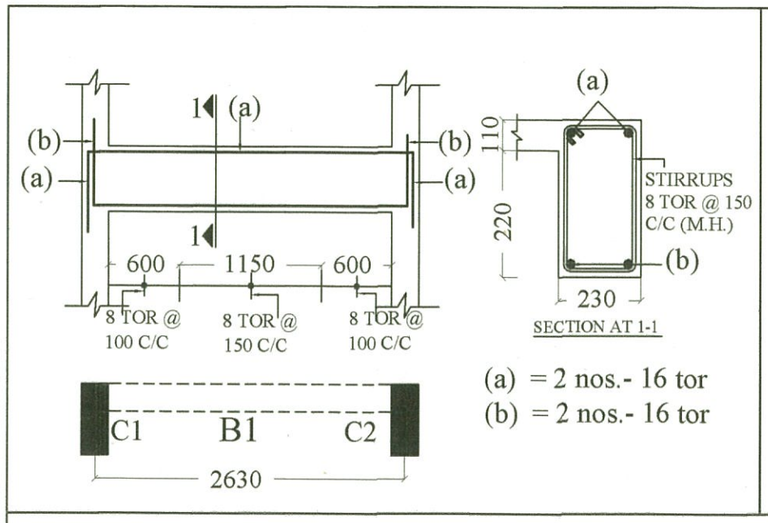

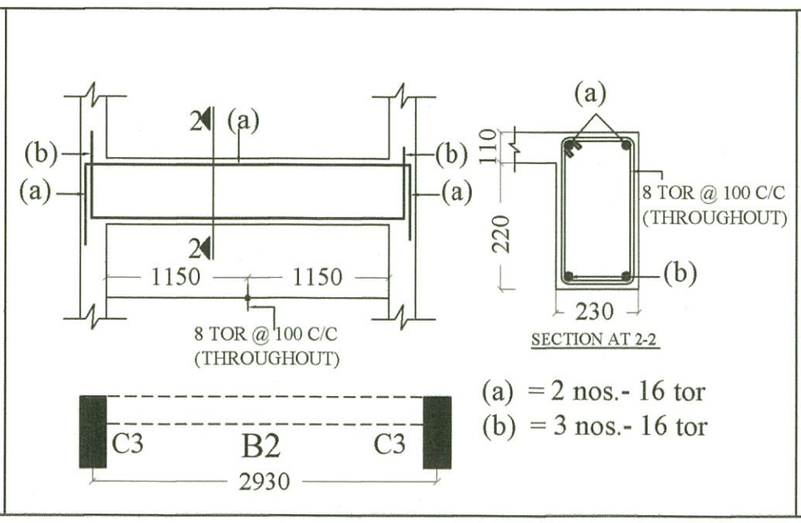

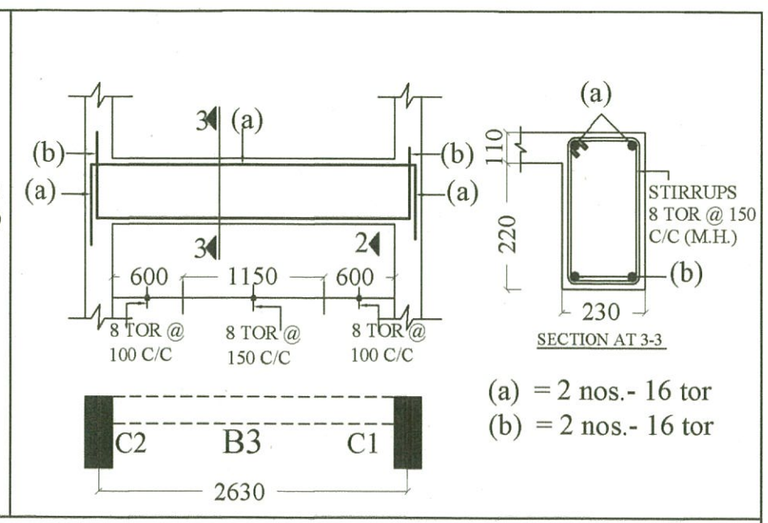

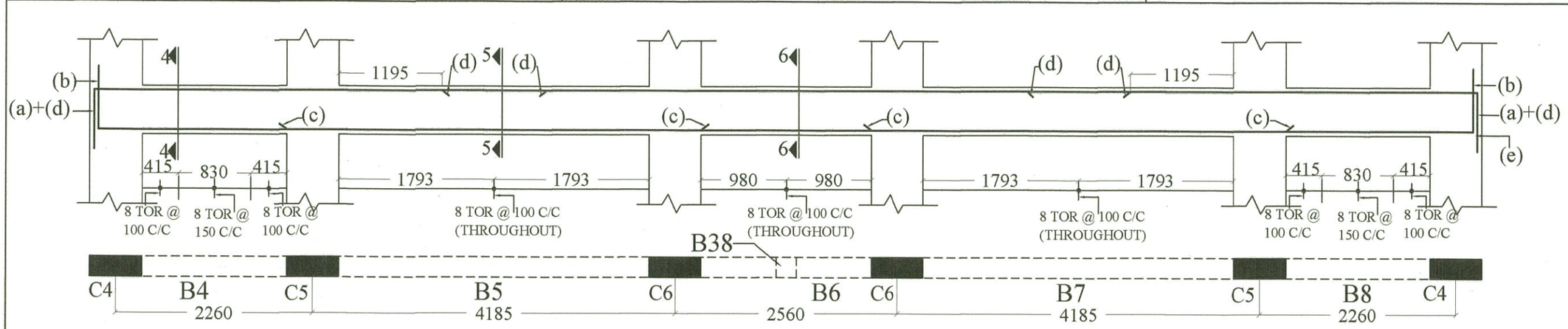

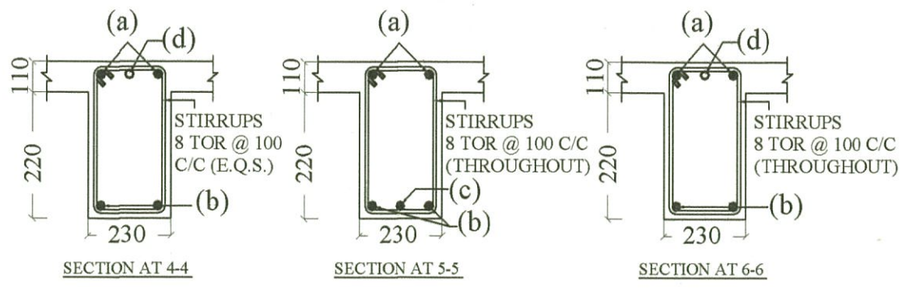

(a) = 2 nos.- 16 tor
(b) = 2 nos.- 16 tor
(c) = 1 nos.- 16 tor
(d) = 1 nos.- 16 tor

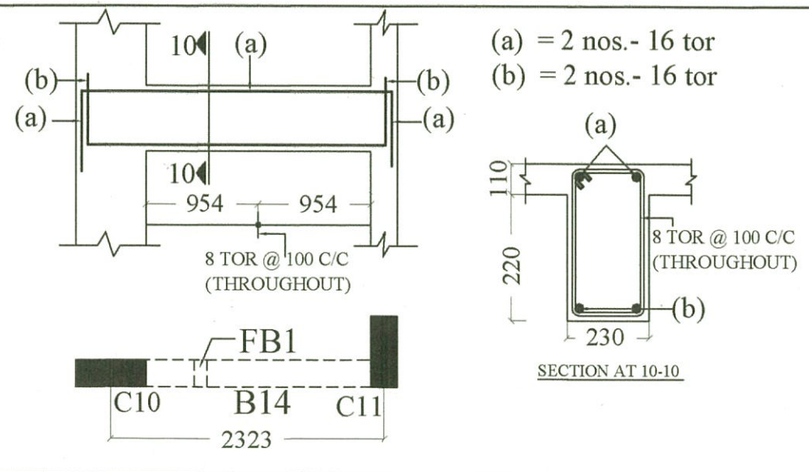

PROJECT
TYPE - I RESIDENCE FOR P.W.D. DEHRADUN.

TITLE
REINF. DETAIL OF ROOF BEAMS.

DRAWN	DATE	DRG. NO.	REV. NO.
SEEMA	03.10. 2012	TYPE -1- STR.-17	1

CONSULTANT :
SUNEET PRASAD
STRUCTURAL & CONSULTING ENGINEER

Suneet Prasad
SUNEET PRASAD
B. E., M. E. (CIVIL), M I V, F I V
AUTHORIZED STRUCTURAL ENGINEER
20, PHASE-I, ENGINEERS ENCLAVE
G.M.S. ROAD, DEHRADUN-248 001
REG. No: DoH - UK / ASE - III / 2008

Checked and approved
Gupta
SUBHASH CHANDRA GUPTA
B.E. Civil (Hon's), M. TECH. (Structure)
Reg. No. DOH-UK/ASE-VI/2008
University of Petrolium & Energy Studie

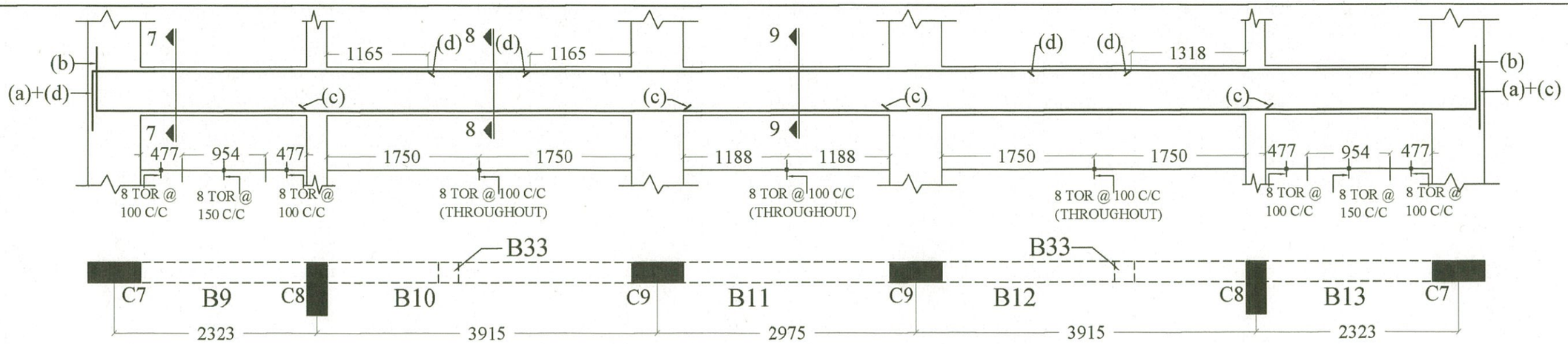

(a) = 2 nos.- 16 tor
(b) = 2 nos.- 16 tor
(c) = 1 nos.- 16 tor
(d) = 1 nos.- 16 tor

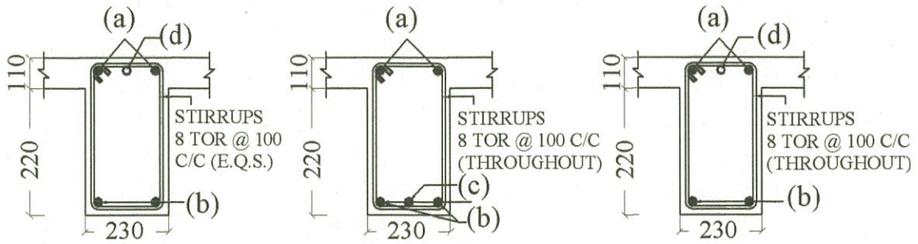

SECTION AT 7-7 SECTION AT 8-8 SECTION AT 9-9

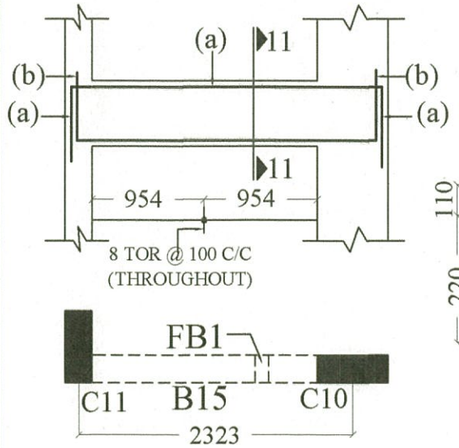

(a) = 2 nos.- 16 tor
(b) = 2 nos.- 16 tor

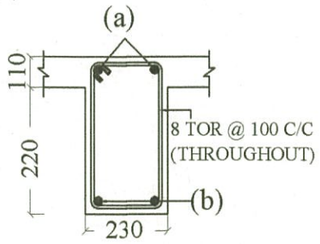

SECTION AT 11-11

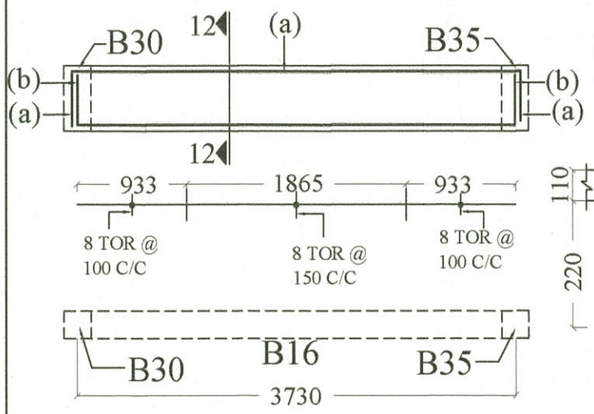

(a) = 2 nos.- 16 tor
(b) = 3 nos.- 16 tor

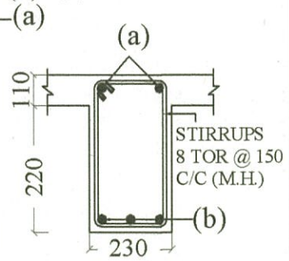

SECTION AT 12-12

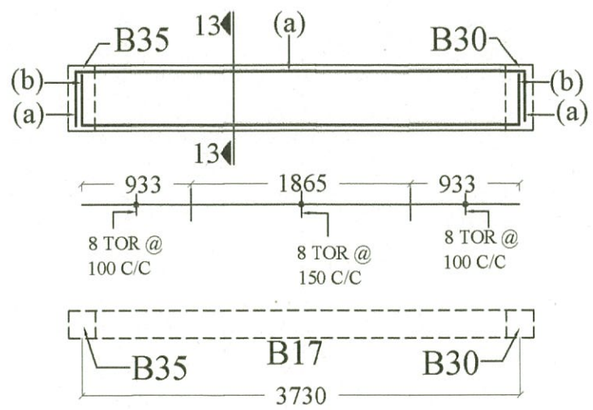

(a) = 2 nos.- 16 tor
(b) = 3 nos.- 16 tor

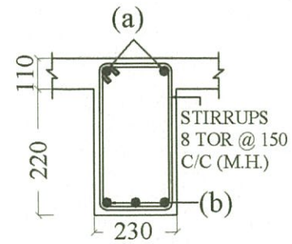

SECTION AT 13-13

PROJECT
TYPE - I RESIDENCE FOR P.W.D. DEHRADUN.

TITLE
REINF. DETAIL OF ROOF BEAMS.

DRAWN	DATE	DRG. NO.	REV. NO.
SEEMA	03.10. 2012	TYPE -1- STR.-18	1

CONSULTANT :

SUNEET PRASAD
STRUCTURAL & CONSULTING ENGINEER

Suneet Prasad.
SUNEET PRASAD
B. E., M. E. (CIVIL), M I V, F I V
AUTHORIZED STRUCTURAL ENGINEER
20, PHASE-I, ENGINEERS ENCLAVE
G.M.S. ROAD, DEHRADUN-248 001
REG. No: DoH - UK / ASE - III / 2008

Checked and approved
Gupta
SUBHASH CHANDRA GUPTA
B.E. Civil (Hons), M. TECH. (Structure)
Reg. No. DOH-UK/ASE-VI/2008
University of Petrolium & Energy Studies

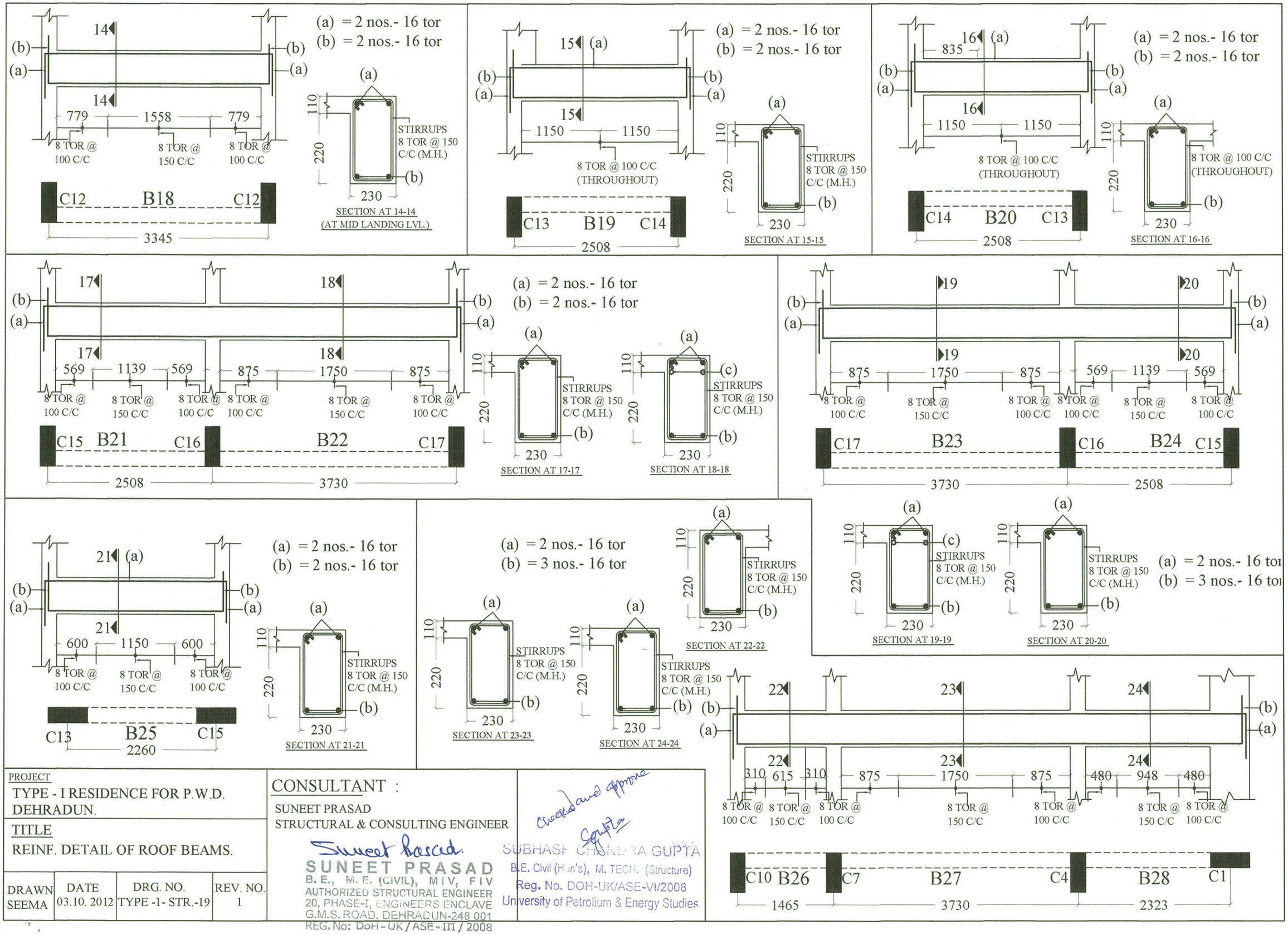

PROJECT
TYPE - I RESIDENCE FOR P.W.D. DEHRADUN.

TITLE
REINF. DETAIL OF ROOF BEAMS.

DRAWN	DATE	DRG. NO.	REV. NO.
SEEMA	03.10. 2012	TYPE -1- STR.-19	1

CONSULTANT :
SUNEET PRASAD
STRUCTURAL & CONSULTING ENGINEER

Suneet Prasad
SUNEET PRASAD
B. E., M. E. (CIVIL), M I V, F I V
AUTHORIZED STRUCTURAL ENGINEER
20, PHASE-I, ENGINEERS ENCLAVE
G.M.S. ROAD, DEHRADUN-248 001
REG. No: DoH - UK / ASE - III / 2008

Checked and approve
Gupta
SUBHASH CHANDRA GUPTA
B.E. Civil (Hon's), M. TECH. (Structure)
Reg. No. DOH-UK/ASE-VI/2008
University of Petrolium & Energy Studies

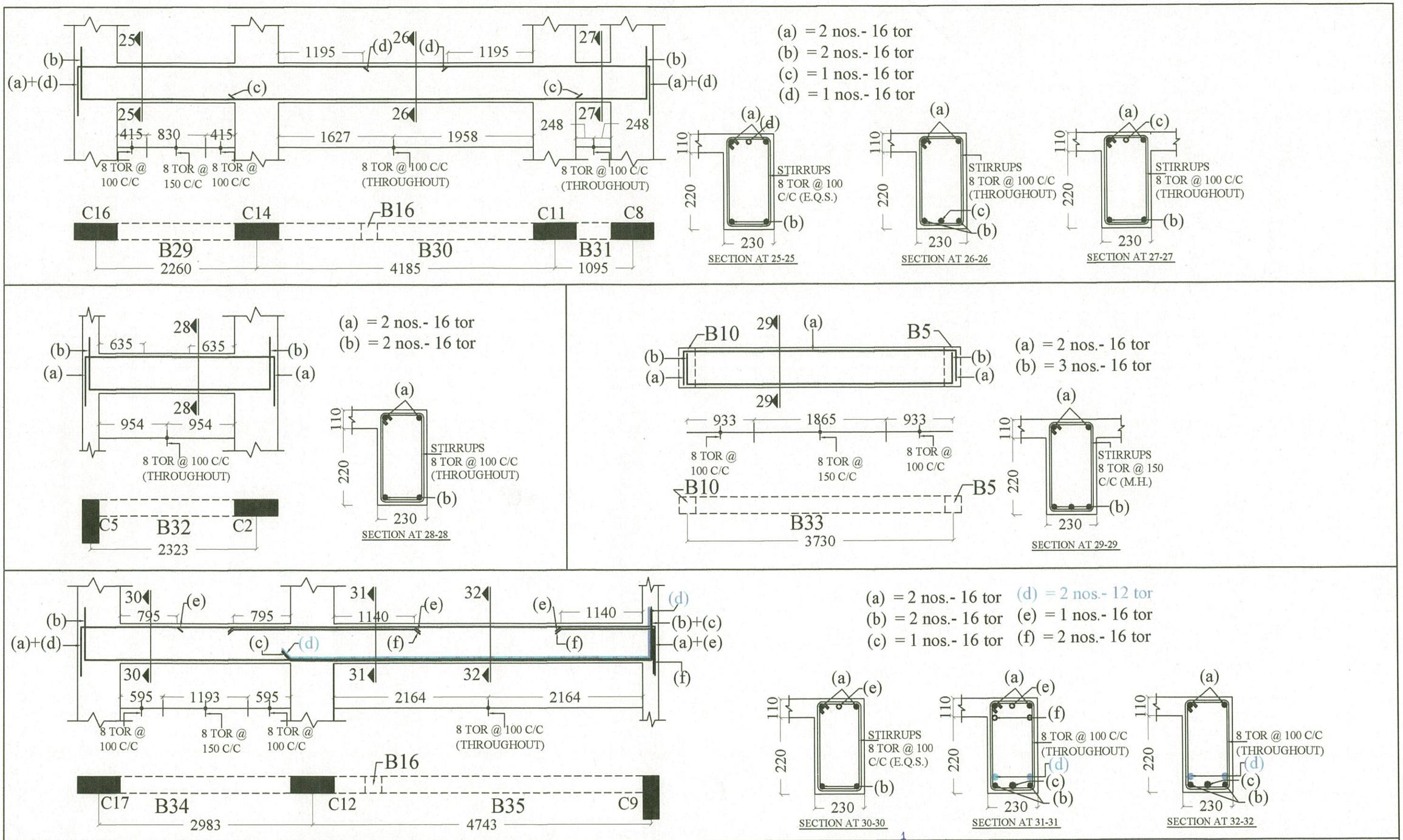

PROJECT

TYPE - I RESIDENCE FOR P.W.D. DEHRADUN.

TITLE

REINF. DETAIL OF ROOF BEAMS.

DRAWN	DATE	DRG. NO.	REV. NO.
SEEMA	03.10. 2012	TYPE -1- STR.-20	1

CONSULTANT :

SUNEET PRASAD
STRUCTURAL & CONSULTING ENGINEER

Suneet Prasad

SUNEET PRASAD
B. E., M. E. (CIVIL), M I V, F I V
AUTHORIZED STRUCTURAL ENGINEER
20, PHASE-I, ENGINEERS ENCLAVE
G.M.S. ROAD, DEHRADUN-248 001
REG. No: DoH - UK / ASE - III / 2008

Checked and approved

SUBHASH CHANDRA GUPTA
B.E. Civil (Hon's), M. TECH. (Structure)
Reg. No. DOH-UK/ASE-VI/2008
University of Petrolium & Energy Studie

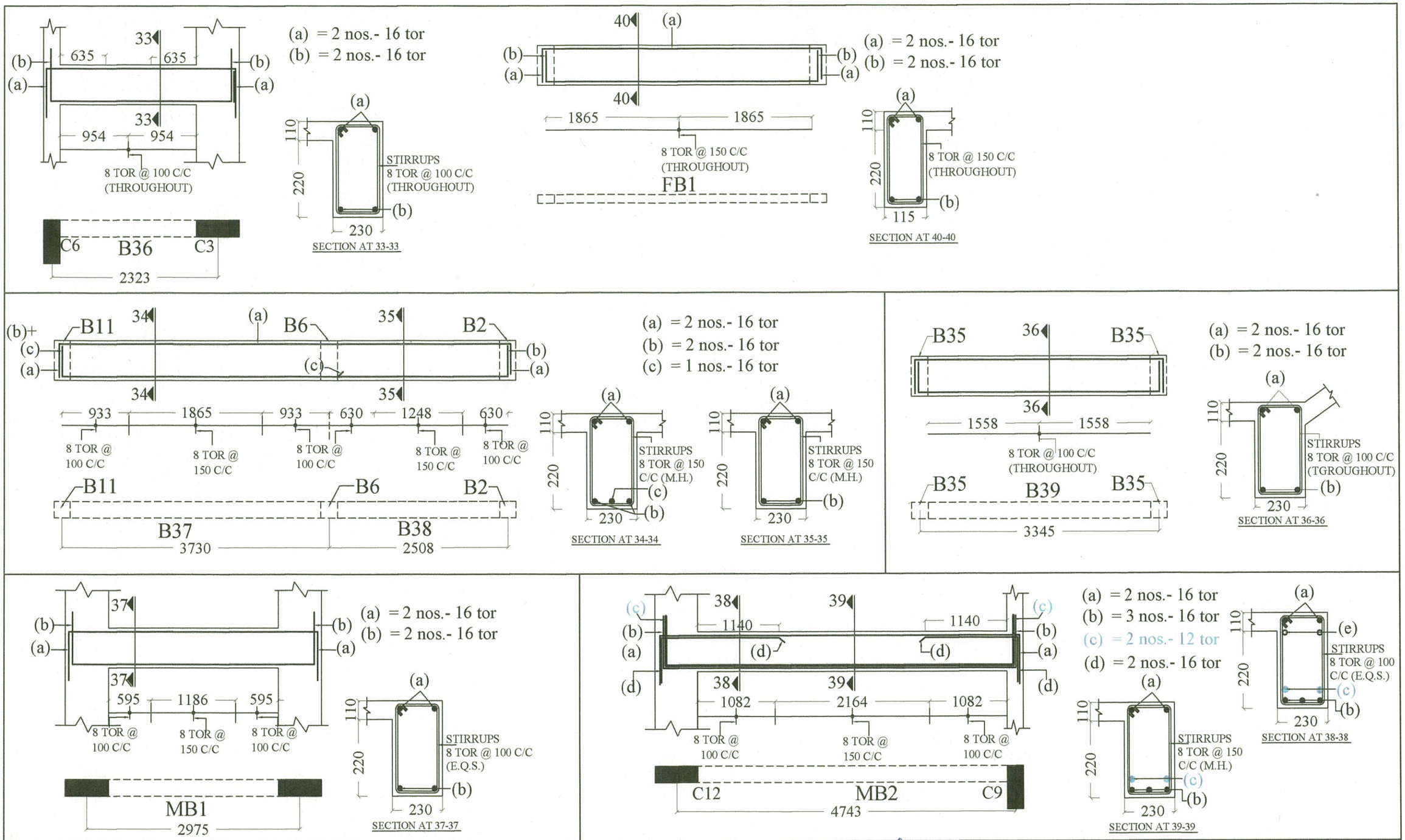

PROJECT

TYPE - I RESIDENCE FOR P.W.D. DEHRADUN.

TITLE

REINF. DETAIL OF ROOF BEAMS.

DRAWN	DATE	DRG. NO.	REV. NO.
SEEMA	03.10. 2012	TYPE -1- STR.-21	1

CONSULTANT :

SUNEET PRASAD
STRUCTURAL & CONSULTING ENGINEER

Suneet Prasad

SUNEET PRASAD
B. E., M. E. (CIVIL), M I V, F I V
AUTHORIZED STRUCTURAL ENGINEER
20, PHASE-I, ENGINEERS ENCLAVE
G.M.S. ROAD, DEHRADUN-248 001
REG. No: DoH - UK / ASE - III / 2008

Checked and approve
Gupta

SUBHASH CHANDRA GUPTA
B.E. Civil (H ..n's), M. TECH. (Structure)
Reg. No. DOH-UK/ASE-VI/2008
University of Petrolium & Energy Studies

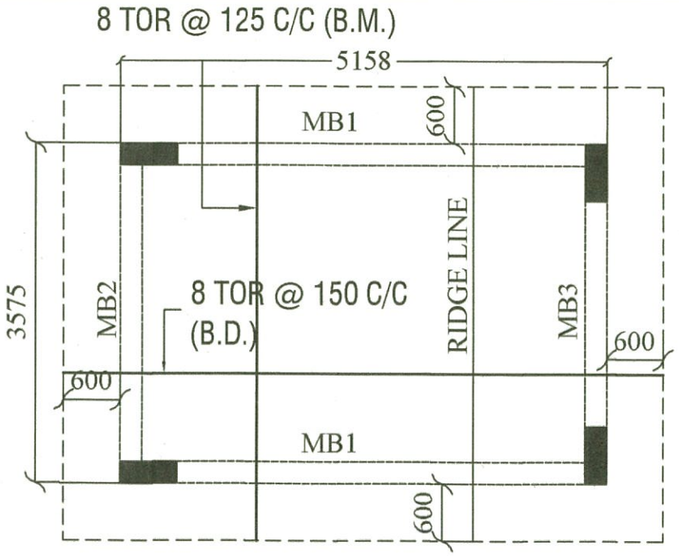

REINF. DETAIL OF MUMTY SLAB (WITH BOTTOM BARS)

110 THICK SLAB

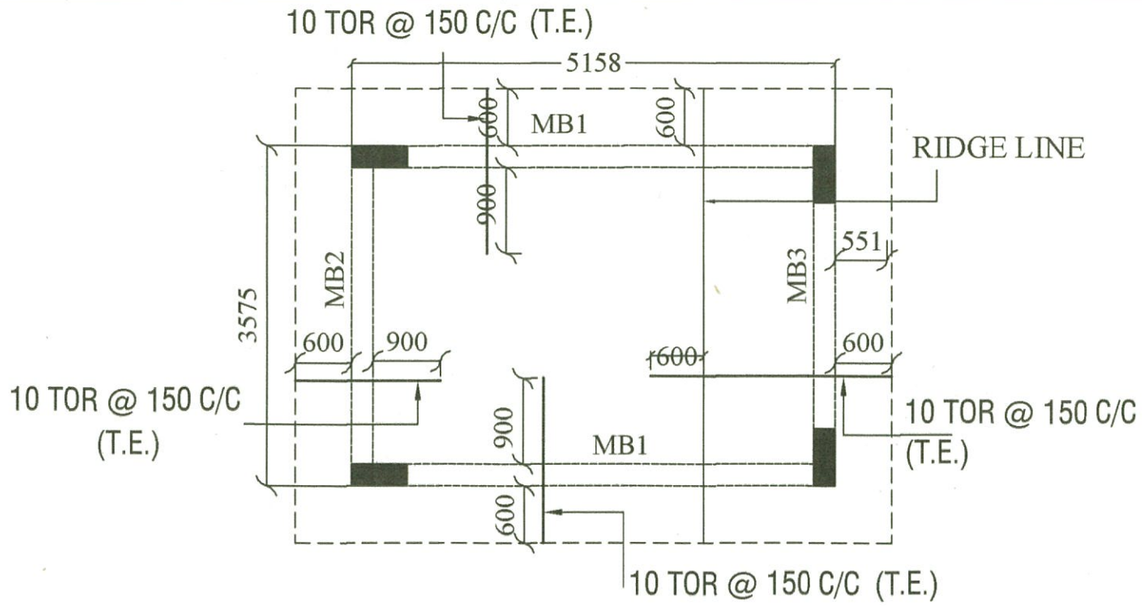

REINF. DETAIL OF MUMTY SLAB (WITH TOP BARS) (110 TH. SLAB)

TOP DISST. 8 TOR @ 200 C/C (WHEREVER REQUIRED)

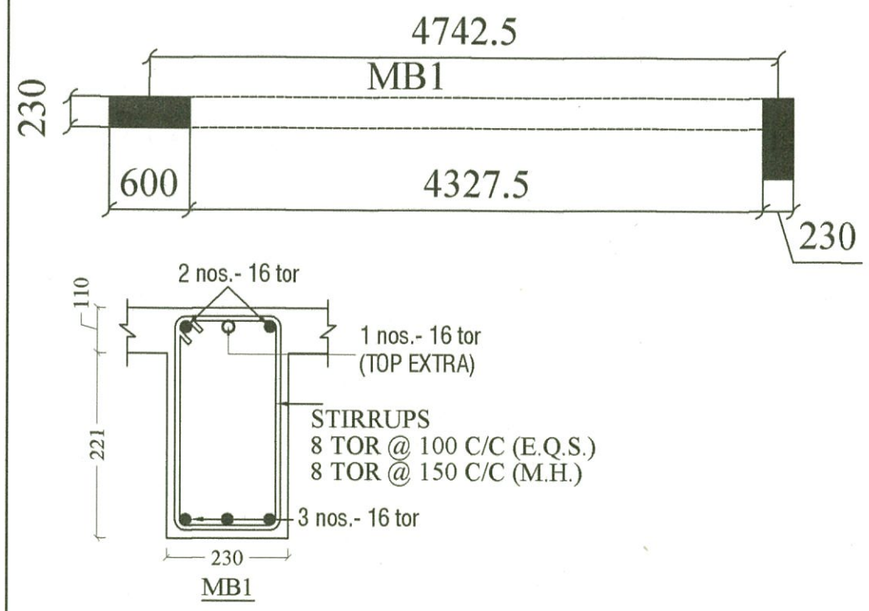

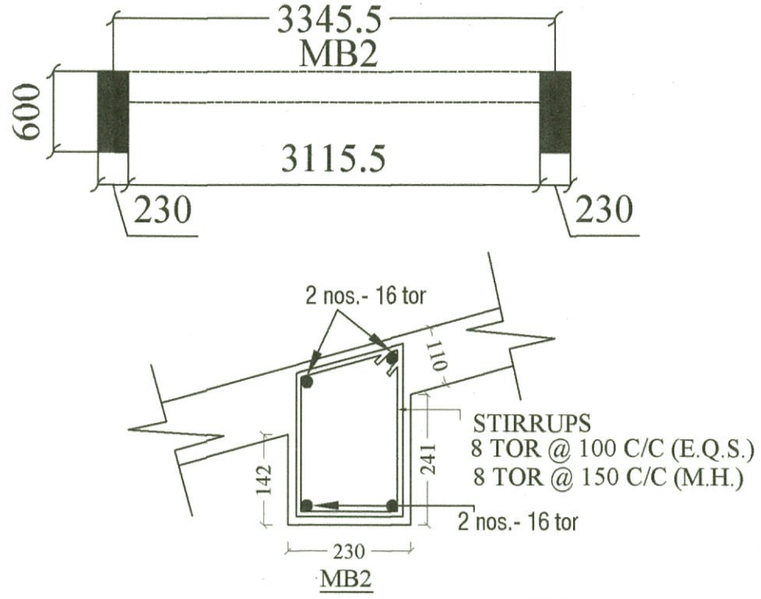

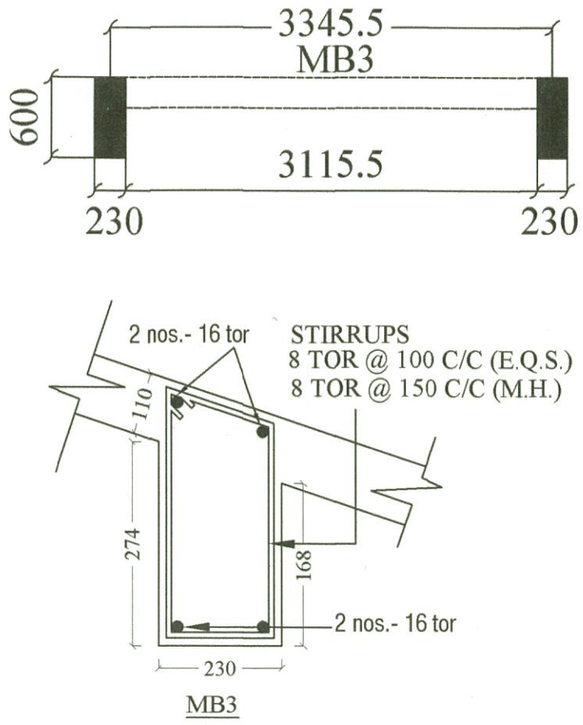

PROJECT

TYPE - I RESIDENCE FOR P.W.D. DEHRADUN.

TITLE

REINF. DETAIL OF ROOF BEAMS.

DRAWN	DATE	DRG. NO.	REV. NO.
SEEMA	03.10. 2012	TYPE -1- STR.-22	1

CONSULTANT :

SUNEET PRASAD
STRUCTURAL & CONSULTING ENGINEER

Suneet Prasad

SUNEET PRASAD
B. E., M. E. (CIVIL), M I V, F I V
AUTHORIZED STRUCTURAL ENGINEER
20, PHASE-I, ENGINEERS ENCLAVE
G.M.S. ROAD, DEHRADUN-248 001
REG. No: DoH - UK / ASE - III / 2008

Checked and approve

SUBHASH CHANDRA GUPTA
B.E. Civil (H ɔn's), M. TECH. (Structure)
Reg. No. DOH-UK/ASE-VI/2008
University of Petrolium & Energy Studi

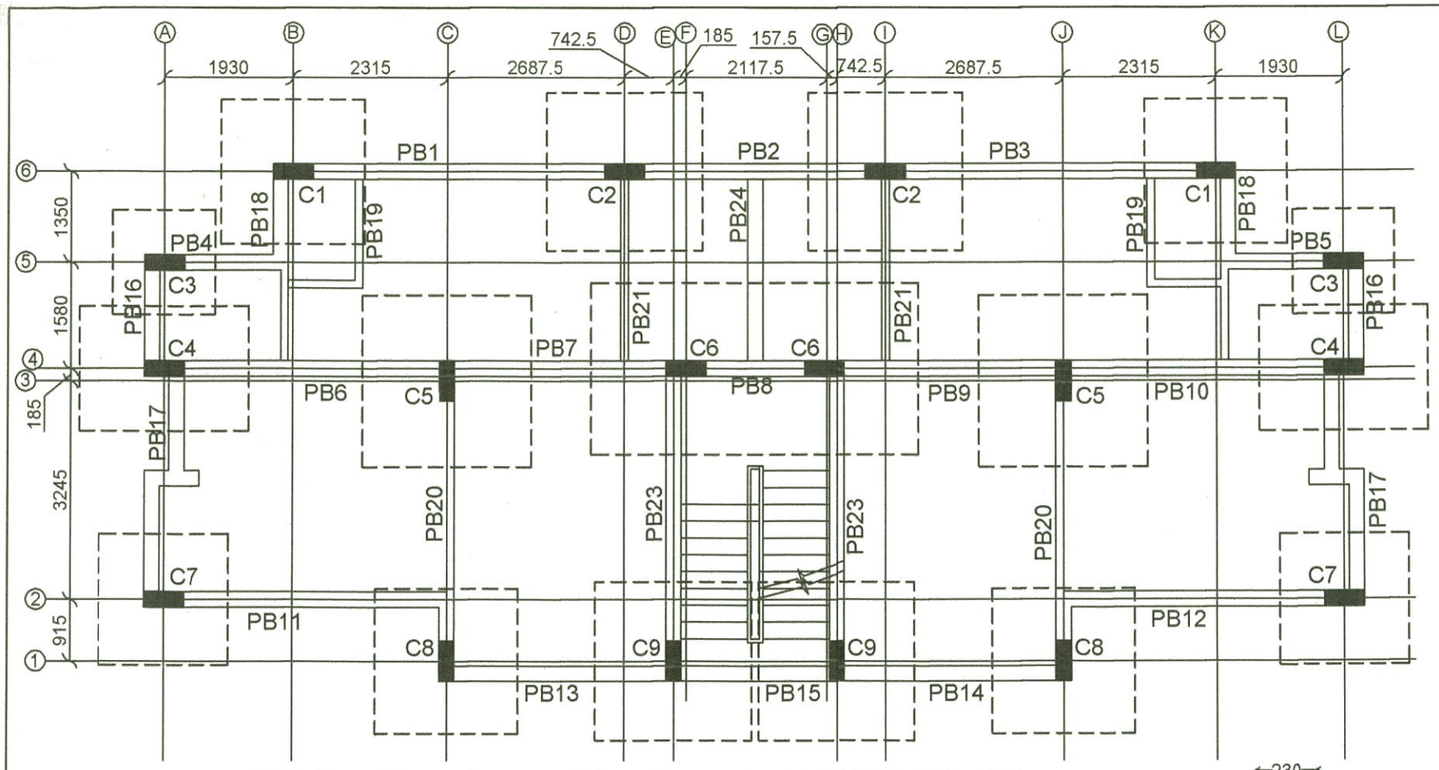

EXCAVATION & COLUMN LAYOUT PLAN

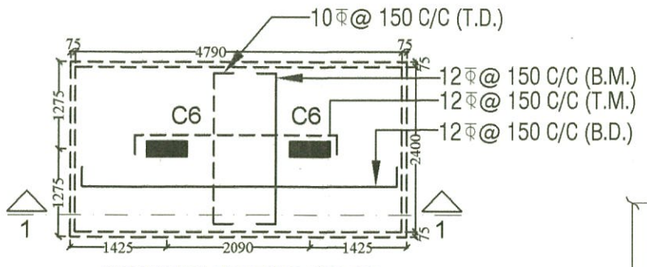

COMBINED FOOTING FOR C6

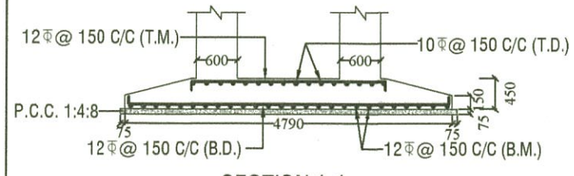

SECTION 1-1

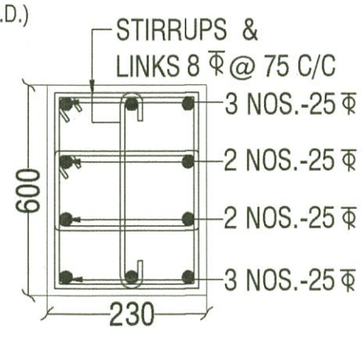

C6

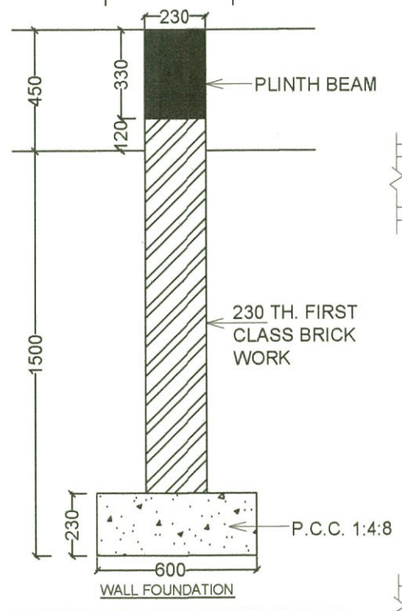

WALL FOUNDATION

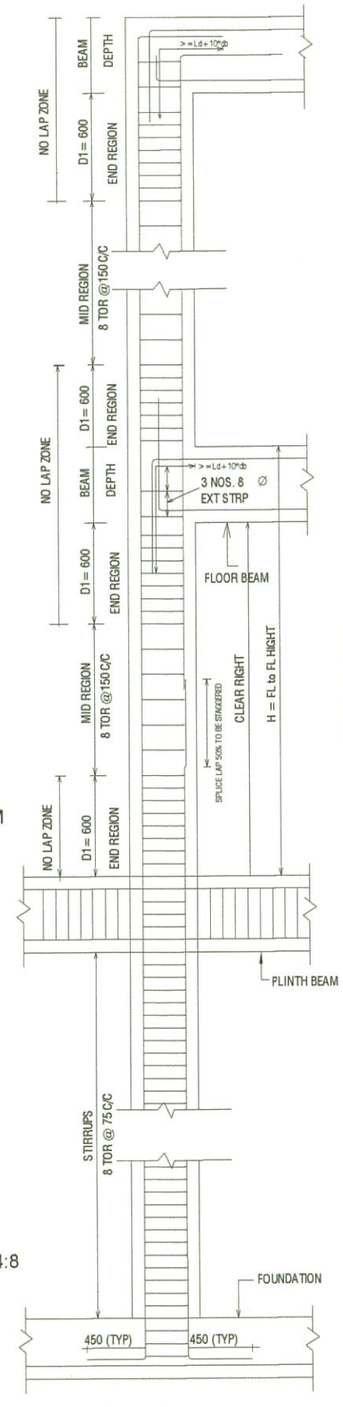

COLUMN (L) TIE AND SPLICE DETAIL

STIRRUPS END REGION 8Φ @ 75 C/C
MID REGION 8Φ @ 150 C/C

d_b = DIA OF BAR

	12Φ	16Φ	20Φ	25Φ	28Φ
Ld	550	750	950	1150	1300

DEVELOPMENT LENGTH = Ld + 10 * d_b

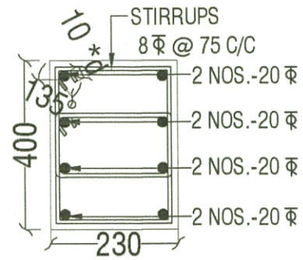

TYPICAL STIRRUPS DETAIL
d = DIA OF BAR

NOTES

1. READ THIS DRAWING IN CONJUCTION WITH RELEVANT ARCH. DRAWING.
2. ALL DIMENSIONS IN MM.
3. M20 GRADE CONCRETE SHALL BE USED UNLESS NOTED OTHERWISE.
4. REINFORCEMENT BAR TO BE USED SHALL BE HIGH YIELD STRENGTH DEFORMED BAR STRESS 415N/mm².
5. ANY LAP OF BAR SHALL NOT BE LESS THAN 50xDIA OF LARGER DIA.
6. CLEAR COVER TO MAIN REINF.SHALL BE AS FOLLOWS

FOOTINGS	-	50MM.
WALL	-	25MM.
COLUMN	-	40MM.
BEAM	-	25MM.
SLAB	-	20MM.

7. ALL STEEL SHOULD BE FREE OF RUST, SCALE ,GREASE, DIRT, OIL, ETC.
8. ALL CONCRETE TO BE MECHANICALLY MIXED AND VIBRATED
9. ALL CONCRETE TO BE PLACED AGAINST STEEL OR WATER ROOF PLY. PUCCA SHUTTERING
10. NET ALLOWABLE BEARING CAPACITY OF SOIL IS TAKEN AS 10.00 TONS / SQM. AT 1.50 M. DEPTH BELOW GROUND LEVEL.
11. BUILDING IS DESIGNED FOR GROUND +2 FLOORS.
12. BUILDING IS DESIGNED FOR SESMIC ZONE FOUR.

PROJECT

TYPE - 2 RESIDENCE P.W.D. DEHRADUN

TITLE

EXCAVATION & COLUMN LAYOUT PLAN & COLUMN DETAILS.

DRAWN	DATE	DRG. NO.	REV. NO.
RASHMI	30.08. 2012	TYPE- 2- STR.- 1	1

CONSULTANT :

SUNEET PRASAD
STRUCTURAL & CONSULTING ENGINEER

Suneet Prasad

SUNEET PRASAD
B. E., M. E. (CIVIL), M I V, F I V
AUTHORIZED STRUCTURAL ENGINEER
20, PHASE-I, ENGINEERS ENCLAVE
G.M.S. ROAD, DEHRADUN-248 001
REG. No: DoH - UK / ASE - III / 2008

Checked and approve

Gupta

SUBHASH CHANDRA GUPTA
B.E. Civil (Hon's), M. T[illegible]
Reg. No. [illegible]

COLS.	EXCAVATION SIZE	FOUNDATION SIZE IN (MM)							REINF. IN FOOTING		COLUMN REINF.
		L	B	D	l_1	b_1	a	b	nL	nB	
C1	2150X2150	1500	1500	380	885	700	230	600	13 NOS.-12 ϕ	13 NOS.-12 ϕ	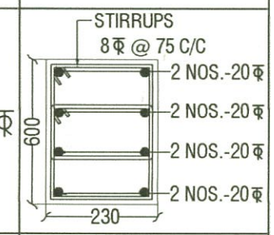
C2	2350X2350	2150	2150	380	985	800	230	600	17 NOS.-12 ϕ	17 NOS.-12 ϕ	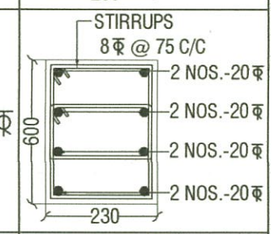
C3	1550X1550	1400	1400	300	585	400	230	600	10 NOS.-10 ϕ	10 NOS.-10 ϕ	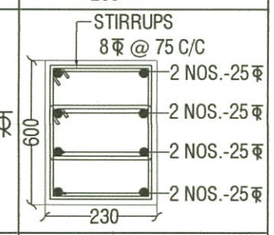
C4	1850X2550	1700	2400	450	735	900	230	600	15 NOS.-12 ϕ	12 NOS.-12 ϕ	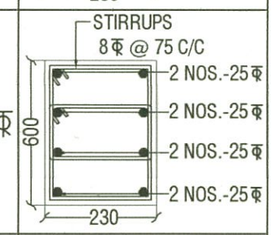
C5	2550X2550	2400	2400	450	1085	900	230	600	18 NOS.-12 ϕ	18 NOS.-12 ϕ	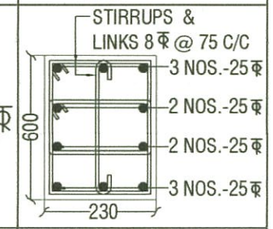
C7	1950X1950	1800	1800	300	785	600	230	600	12 NOS.-12 ϕ	12 NOS.-12 ϕ	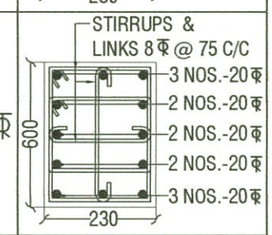
C8	2150X2150	1500	1500	380	885	700	230	600	13 NOS.-12 ϕ	13 NOS.-12 ϕ	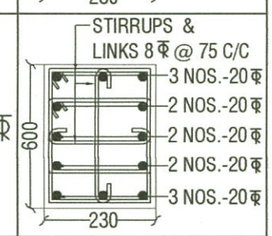
C9	2350X2350	2150	2150	380	985	800	230	600	17 NOS.-12 ϕ	17 NOS.-12 ϕ	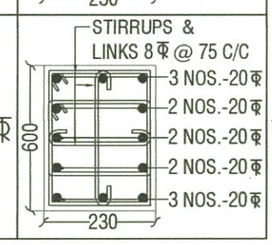

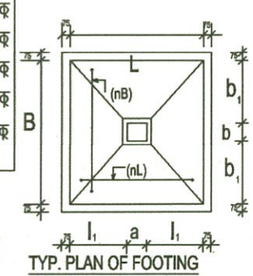

TYP. PLAN OF FOOTING

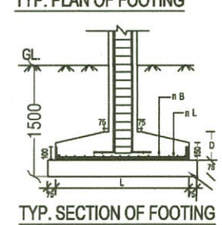

TYP. SECTION OF FOOTING

PROJECT

TYPE - 2 RESIDENCE P.W.D. DEHRADUN

TITLE

EXCAVATION & COLUMN LAYOUT PLAN & COLUMN DETAILS.

DRAWN	DATE	DRG. NO.	REV. NO.
RASHMI	30.08. 2012	TYPE- 2- STR.- 2	1

CONSULTANT :

SUNEET PRASAD
STRUCTURAL & CONSULTING ENGINEER

Suneet Prasad

SUNEET PRASAD
B. E., M. E. (CIVIL), M I V, F I V
AUTHORIZED STRUCTURAL ENGINEER
20, PHASE-I, ENGINEERS ENCLAVE
G.M.S. ROAD, DEHRADUN-248 001
REG. No: DoH - UK / ASE - VI / 2008

Checked and approve

Gupta

SUBHASH CHANDRA GUPTA
B.E. Civil (Hon's), M. TECH. (Structure)
Reg. No. DOH-UK/ASE-VI/2008
University of Petrolium & Energy Studies

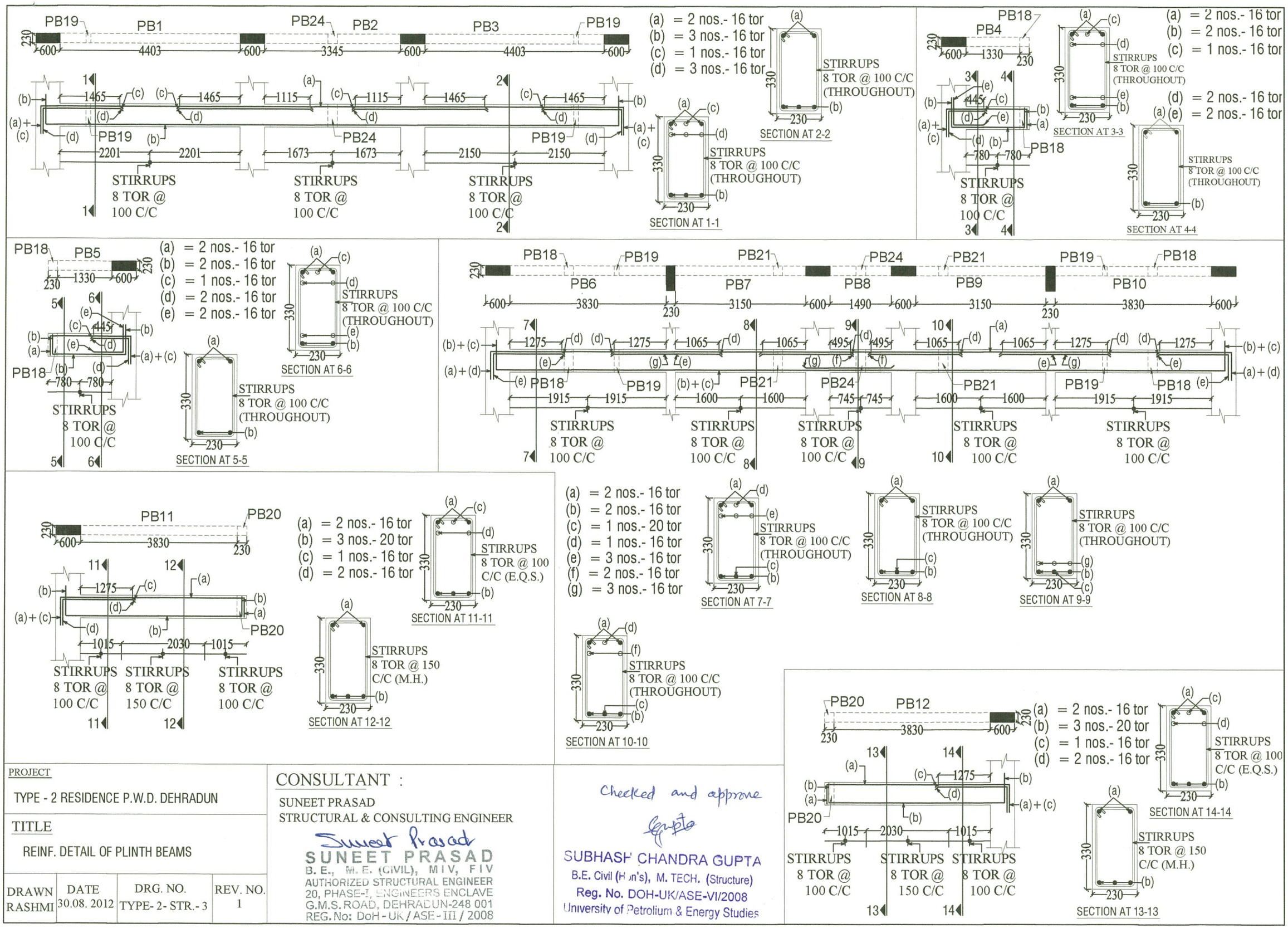

PROJECT

TYPE - 2 RESIDENCE P.W.D. DEHRADUN

TITLE

REINF. DETAIL OF PLINTH BEAMS

DRAWN	DATE	DRG. NO.	REV. NO.
RASHMI	30.08. 2012	TYPE- 2- STR.- 3	1

CONSULTANT :

SUNEET PRASAD
STRUCTURAL & CONSULTING ENGINEER

Suneet Prasad
SUNEET PRASAD
B. E., M. E. (CIVIL), M I V, F I V
AUTHORIZED STRUCTURAL ENGINEER
20, PHASE-I, ENGINEERS ENCLAVE
G.M.S. ROAD, DEHRADUN-248 001
REG. No: DoH - UK / ASE - III / 2008

Checked and approve

SUBHASH CHANDRA GUPTA
B.E. Civil (H.n's), M. TECH. (Structure)
Reg. No. DOH-UK/ASE-VI/2008
University of Petrolium & Energy Studies

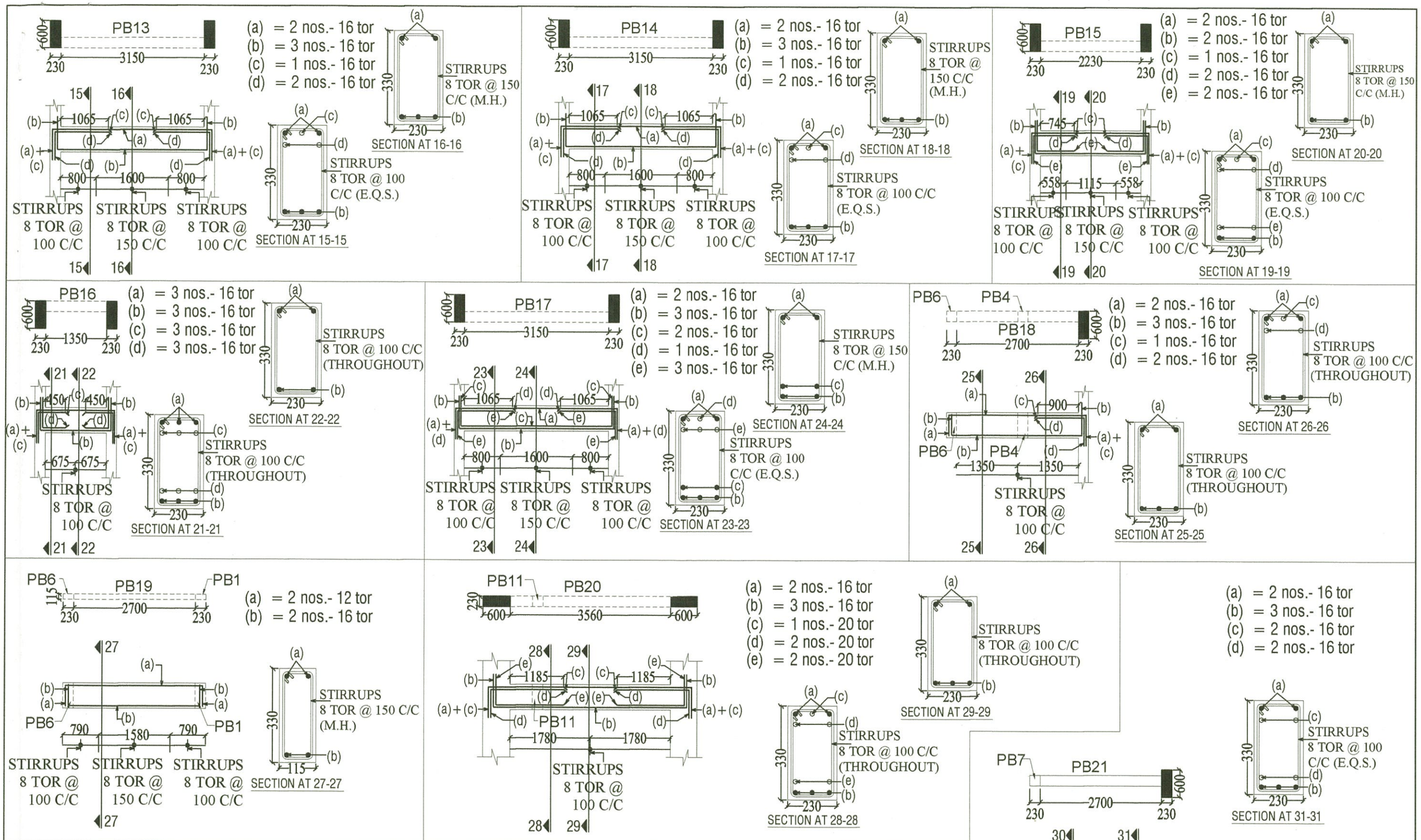

PROJECT

TYPE - 2 RESIDENCE P.W.D. DEHRADUN

TITLE

REINF. DETAIL OF PLINTH BEAMS

DRAWN	DATE	DRG. NO.	REV. NO.
RASHMI	30.08. 2012	TYPE- 2- STR.- 4	1

CONSULTANT :

SUNEET PRASAD
STRUCTURAL & CONSULTING ENGINEER

Suneet Prasad
SUNEET PRASAD
B. E., M. E. (CIVIL), M I V, F I V
AUTHORIZED STRUCTURAL ENGINEER
20, PHASE-I, ENGINEERS ENCLAVE
G.M.S. ROAD, DEHRADUN-248 001
REG. No: DoH - UK / ASE - III / 2008

Checked and approve.

SUBHASH CHANDRA GUPTA
B.E. Civil (Hon's), M. TECH. (Structure)
Reg. No. DOH-UK/ASE-VI/2008
University of Petrolium & Energy Studies

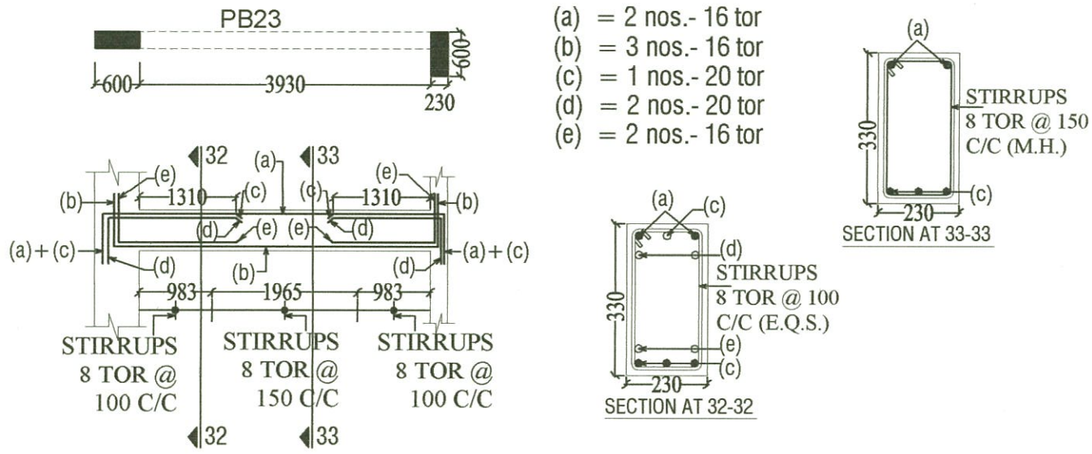

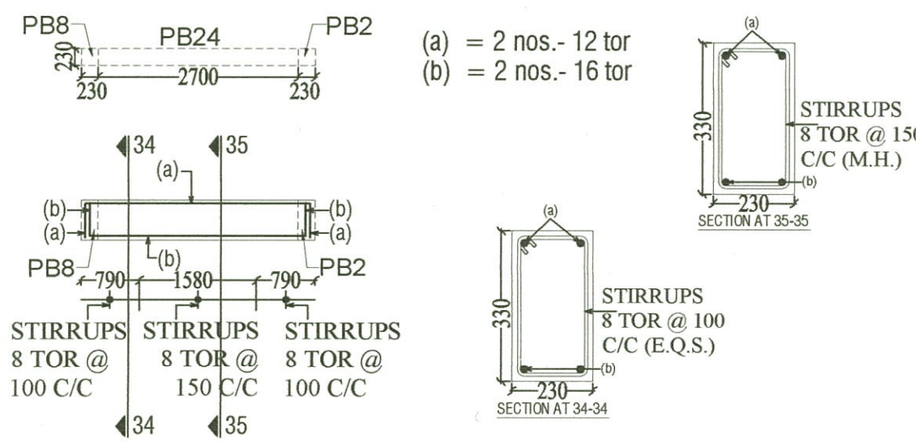

PROJECT				CONSULTANT :	Checked and approve
TYPE - 2 RESIDENCE P.W.D. DEHRADUN				SUNEET PRASAD STRUCTURAL & CONSULTING ENGINEER Suneet Prasad SUNEET PRASAD B. E., M. E. (CIVIL), M I V, F I V AUTHORIZED STRUCTURAL ENGINEER 20, PHASE-I, ENGINEERS ENCLAVE G.M.S. ROAD, DEHRADUN-248 001 REG. No: DoH - UK / ASE - III / 2008	SUBHASH CHANDRA GUPTA B.E. Civil (Hon's), M. TECH. (Structure) Reg. No. DOH-UK/ASE-VI/2008 University of Petroleum ... Energy Studies
TITLE REINF. DETAIL OF PLINTH BEAMS					
DRAWN RASHMI	DATE 30.08. 2012	DRG. NO. TYPE- 2- STR.- 5	REV. NO. 1		

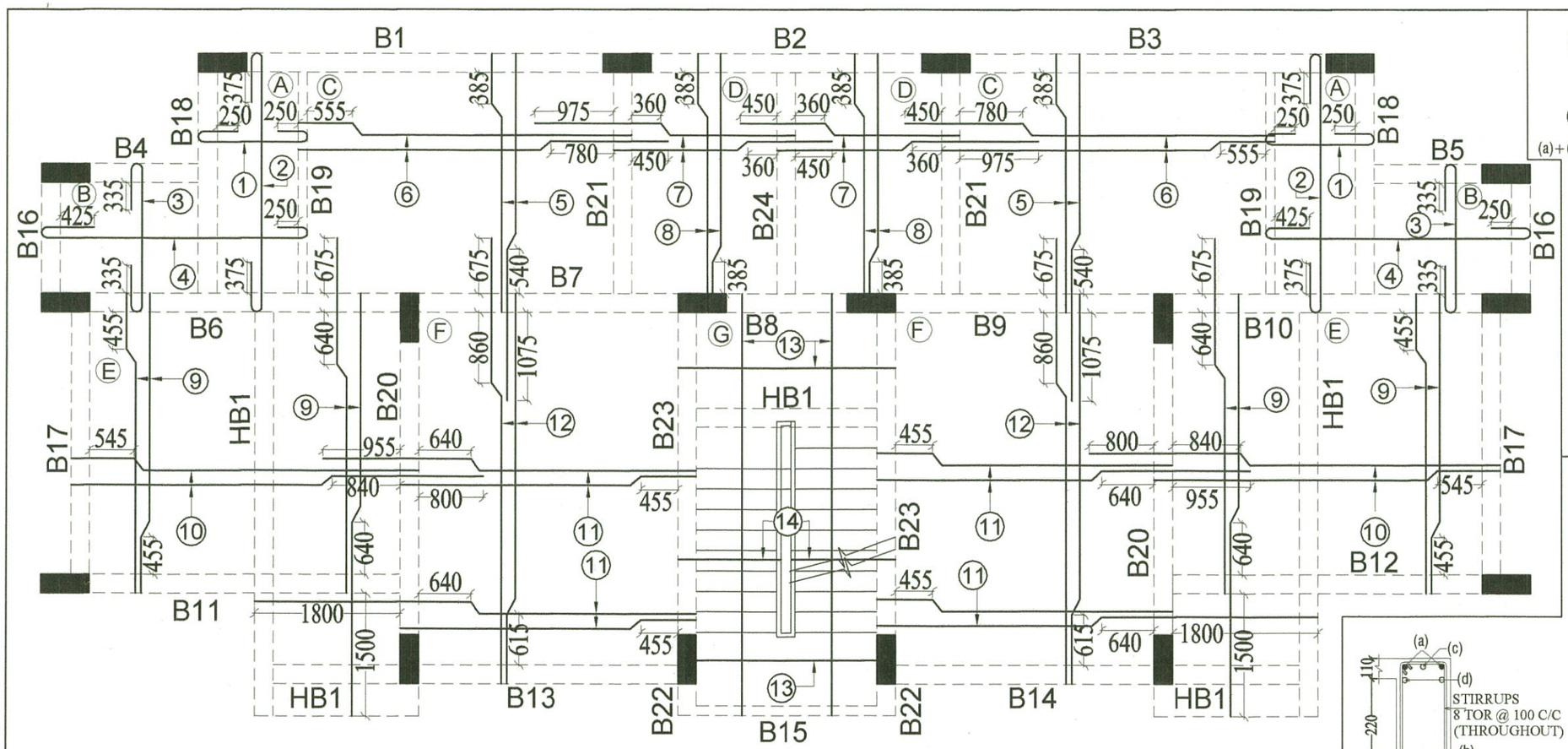

REINF. DETAIL OF FIRST, SECOND FLOOR SLAB WITH (BOTTOM BARS)

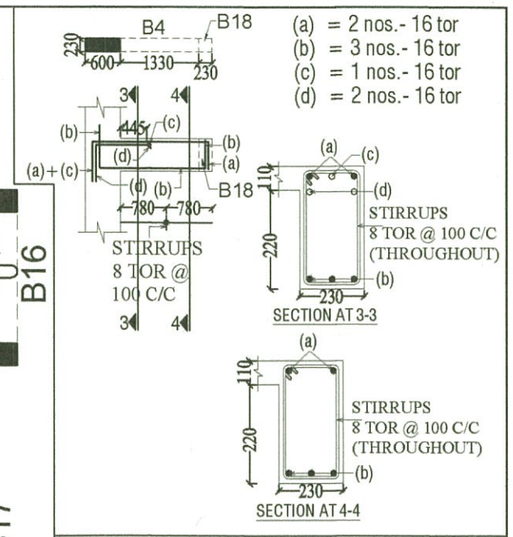

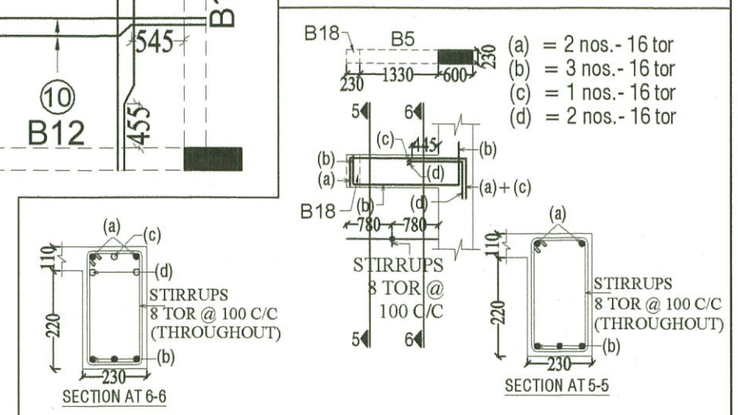

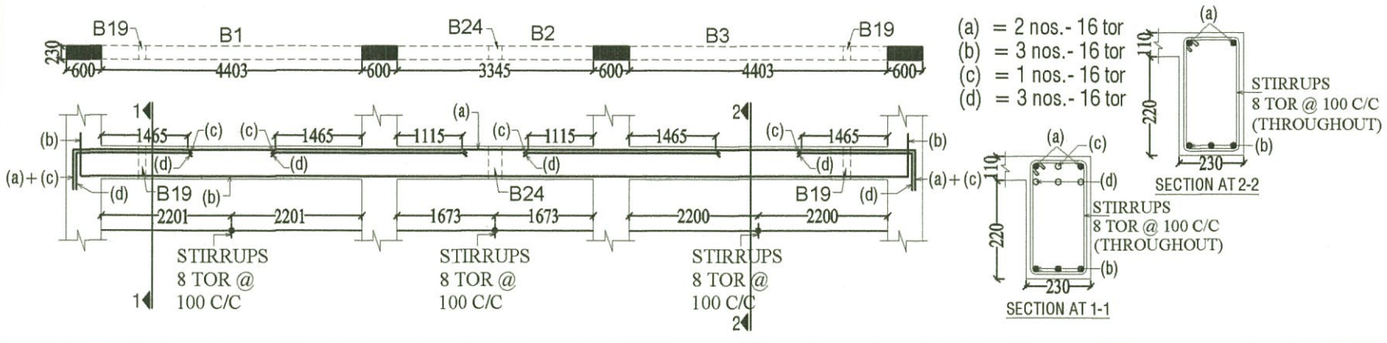

PANEL	BAR MARK	BAR DIA.	SPACING	DESCRIPTION
A (SLAB THICKNESS 110)	1	8 Φ	200C/C	BOTTOM MAIN
	2	8 Φ	200C/C	BOTTOM DIST.
B (SLAB THICKNESS 110)	3	8 Φ	200C/C	BOTTOM MAIN
	4	8 Φ	200C/C	BOTTOM DIST.
C (SLAB THICKNESS 110)	5	8 Φ	200C/C	BOTTOM MAIN
	6	8 Φ	200C/C	BOTTOM DIST.
D (SLAB THICKNESS 110)	7	8 Φ	200C/C	BOTTOM MAIN
	8	8 Φ	200C/C	BOTTOM DIST.
E (SLAB THICKNESS 110)	9	8 Φ	140C/C	BOTTOM MAIN
	10	8 Φ	150C/C	BOTTOM DIST.
F (SLAB THICKNESS 110)	11	8 Φ	150C/C	BOTTOM MAIN
	12	8 Φ	175C/C	BOTTOM DIST.
G (SLAB THICKNESS 110)	13	12 Φ	130C/C	BOTTOM MAIN
	14	8 Φ	150C/C	BOTTOM DIST.

PROJECT

TYPE - 2 RESIDENCE P.W.D. DEHRADUN

TITLE

REINFORCEMENT DETAILS OF FIRST, SECOND FLOOR SLAB & LONGITUDINAL BEAMS.

DRAWN	DATE	DRG. NO.	REV. NO.
RASHMI	30.08. 2012	TYPE- 2- STR.- 6	1

CONSULTANT :

SUNEET PRASAD
STRUCTURAL & CONSULTING ENGINEER

Suneet Prasad.

SUNEET PRASAD
B. E., M.E. (CIVIL), MIV, FIV
AUTHORIZED STRUCTURAL ENGINEER
20, PHASE-I, ENGINEERS ENCLAVE
G.M.S. ROAD, DEHRADUN-248 001
REG. No: DoH - UK / ASE - III / 2008

Checked and approve

Gupta

SUBHASH CHANDRA GUPTA
B.E. Civil (Hon's), M. TECH. (Structure)
Reg. No. DOH-UK/ASE-VI/2008
University of Petrolium & Energy Studies

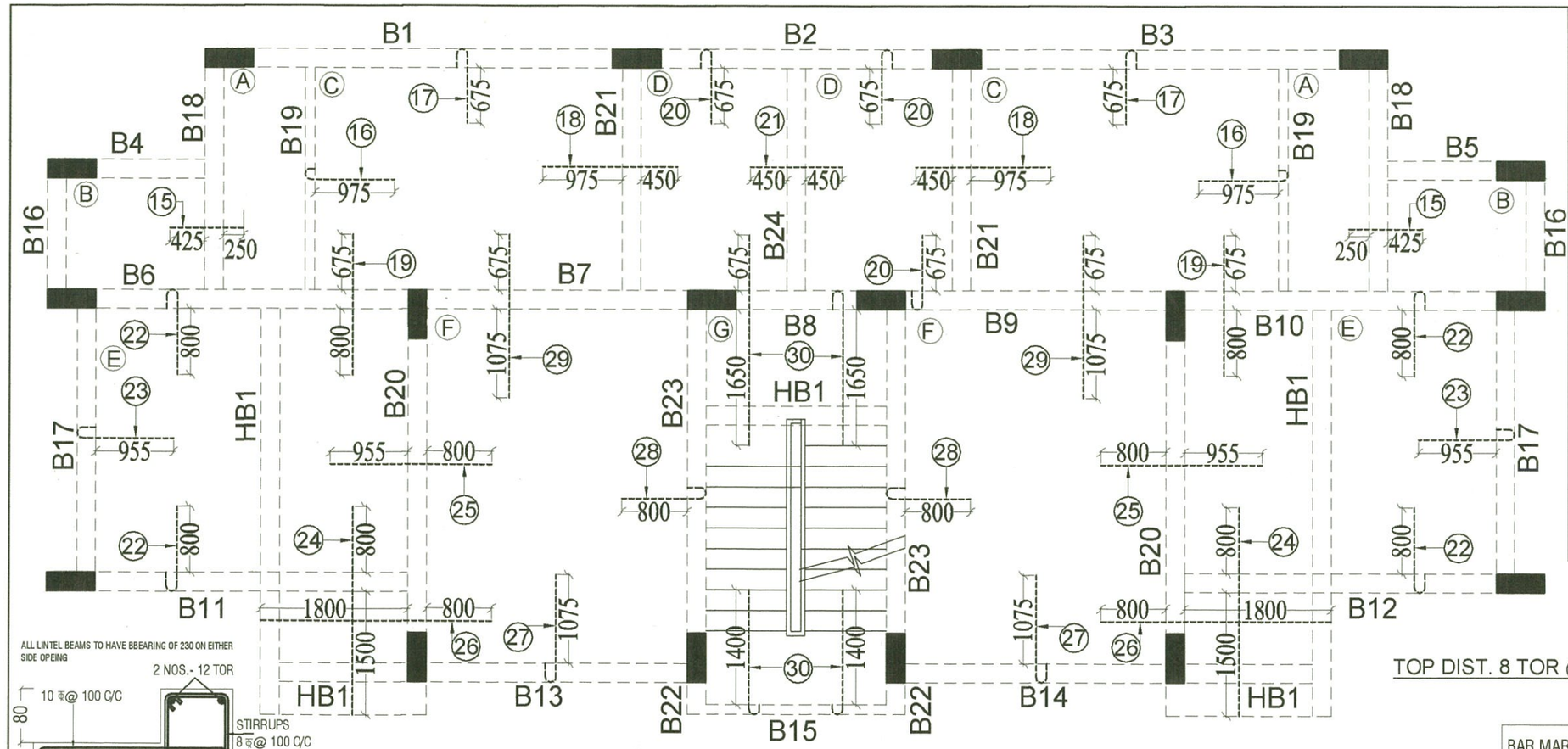

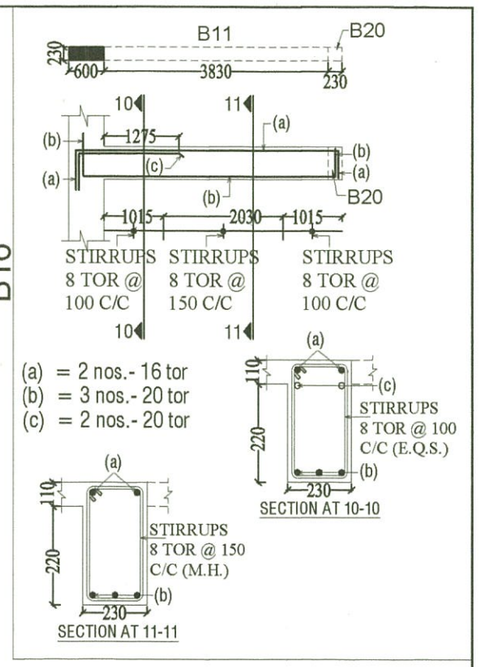

ALL LINTEL BEAMS TO HAVE BBEARING OF 230 ON EITHER SIDE OPEING

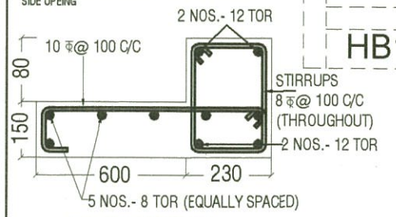

TYPICAL BEAM/ SUNSHADE DETAIL FOR OPENING UPTO 1500

TOP DIST. 8 TOR @ 200 C/C WHERE EVER REQUIRED.

REINF. DETAIL OF FIRST, SECOND FLOOR SLAB WITH (TOP BARS)

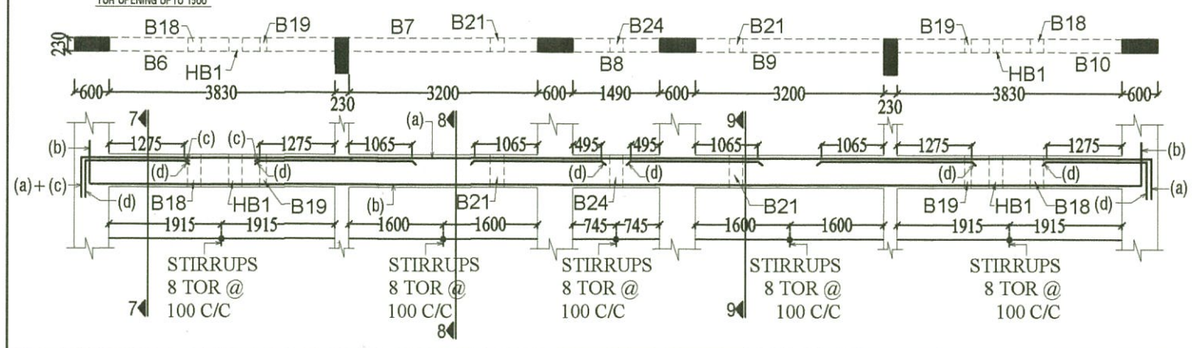

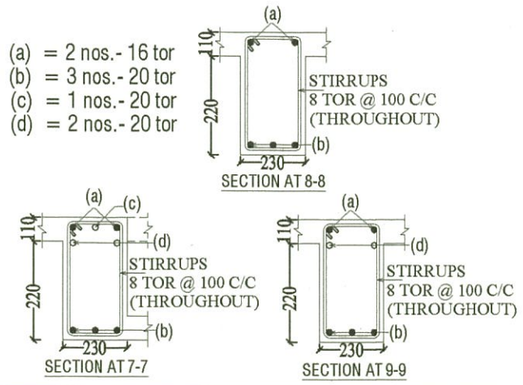

BAR MARK	BAR DIA.	SPACING	DESCRIPTION
15	8 ϕ	400C/C	TOP MAIN
16	8 ϕ	400C/C	TOP MAIN
17	8 ϕ	400C/C	TOP MAIN
18	8 ϕ	350C/C	TOP MAIN
19	8 ϕ	300C/C	TOP MAIN
20	8 ϕ	400C/C	TOP MAIN
21	8 ϕ	400C/C	TOP MAIN
22	8 ϕ	280C/C	TOP MAIN
23	8 ϕ	300C/C	TOP MAIN
24	8 ϕ	280C/C	TOP MAIN
25	8 ϕ	280C/C	TOP MAIN
26	8 ϕ	300C/C	TOP MAIN
27	8 ϕ	350C/C	TOP MAIN
28	8 ϕ	300C/C	TOP MAIN
29	8 ϕ	350C/C	TOP MAIN
30	12 ϕ	130C/C	TOP MAIN

PROJECT

TYPE - 2 RESIDENCE P.W.D. DEHRADUN

TITLE

REINFORCEMENT DETAILS OF FIRST, SECOND FLOOR SLAB & LONGITUDINAL BEAMS.

DRAWN	DATE	DRG. NO.	REV. NO.
RASHMI	30.08. 2012	TYPE- 2- STR.- 7	1

CONSULTANT :

SUNEET PRASAD
STRUCTURAL & CONSULTING ENGINEER

Suneet Prasad

SUNEET PRASAD
B. E., M. E. (CIVIL), M I V, F I V
AUTHORIZED STRUCTURAL ENGINEER
20, PHASE-I, ENGINEERS ENCLAVE
G.M.S. ROAD, DEHRADUN-248 001
REG. No: DoH - UK / ASE - III / 2008

Checked and approve

Gupta

SUBHASH CHANDRA GUPTA
B.E. Civil (Hon's), M. TECH. (Structure)
Reg. No. DOH-UK/ASE-VI/2008
University of Petrolium & Energy Studies

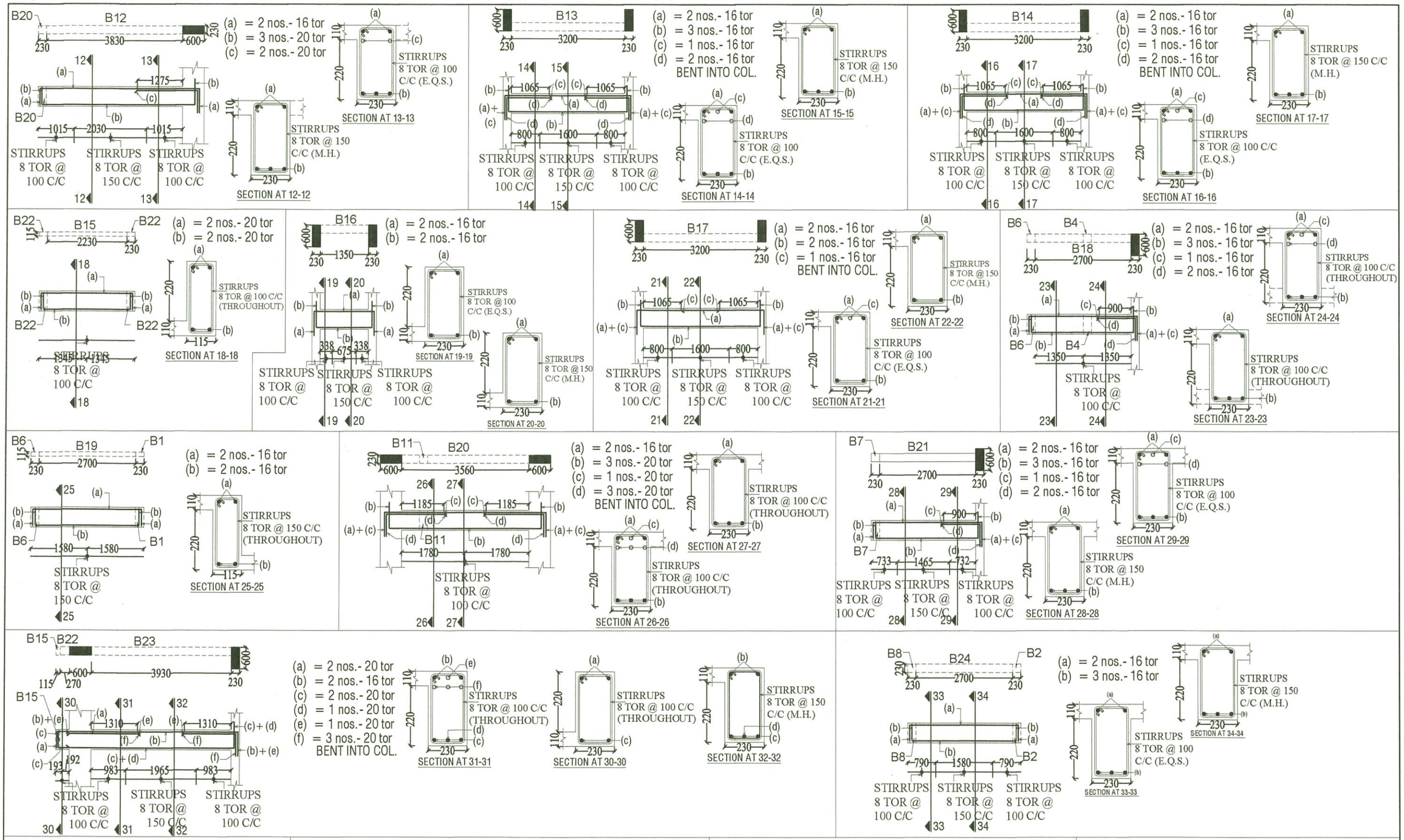

PROJECT

TYPE - 2 RESIDENCE P.W.D. DEHRADUN

TITLE

REINFORCEMENT DETAILS OF FIRST, SECOND FLOOR SLAB & LONGITUDINAL BEAMS.

DRAWN	DATE	DRG. NO.	REV. NO.
RASHMI	30.08. 2012	TYPE- 2- STR.-8	1

CONSULTANT :

SUNEET PRASAD
STRUCTURAL & CONSULTING ENGINEER

Suneet Prasad

SUNEET PRASAD
B.E., M.E. (CIVIL), MIV, FIV
AUTHORIZED STRUCTURAL ENGINEER
20, PHASE-I, ENGINEERS ENCLAVE
G.M.S. ROAD, DEHRADUN-248 001
REG. No: DoH - UK / ASE - III / 2008

Checked and approve

Gupta

SUBHASH CHANDRA GUPTA
B.E. Civil (Hon's), M. TECH. (Structure)
Reg. No. DOH-UK/ASE-VI/2008
University of Petrolium & Energy Studies

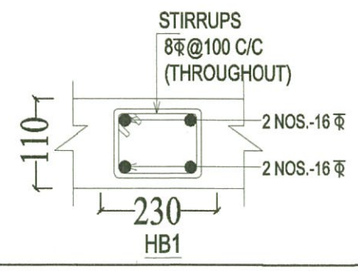

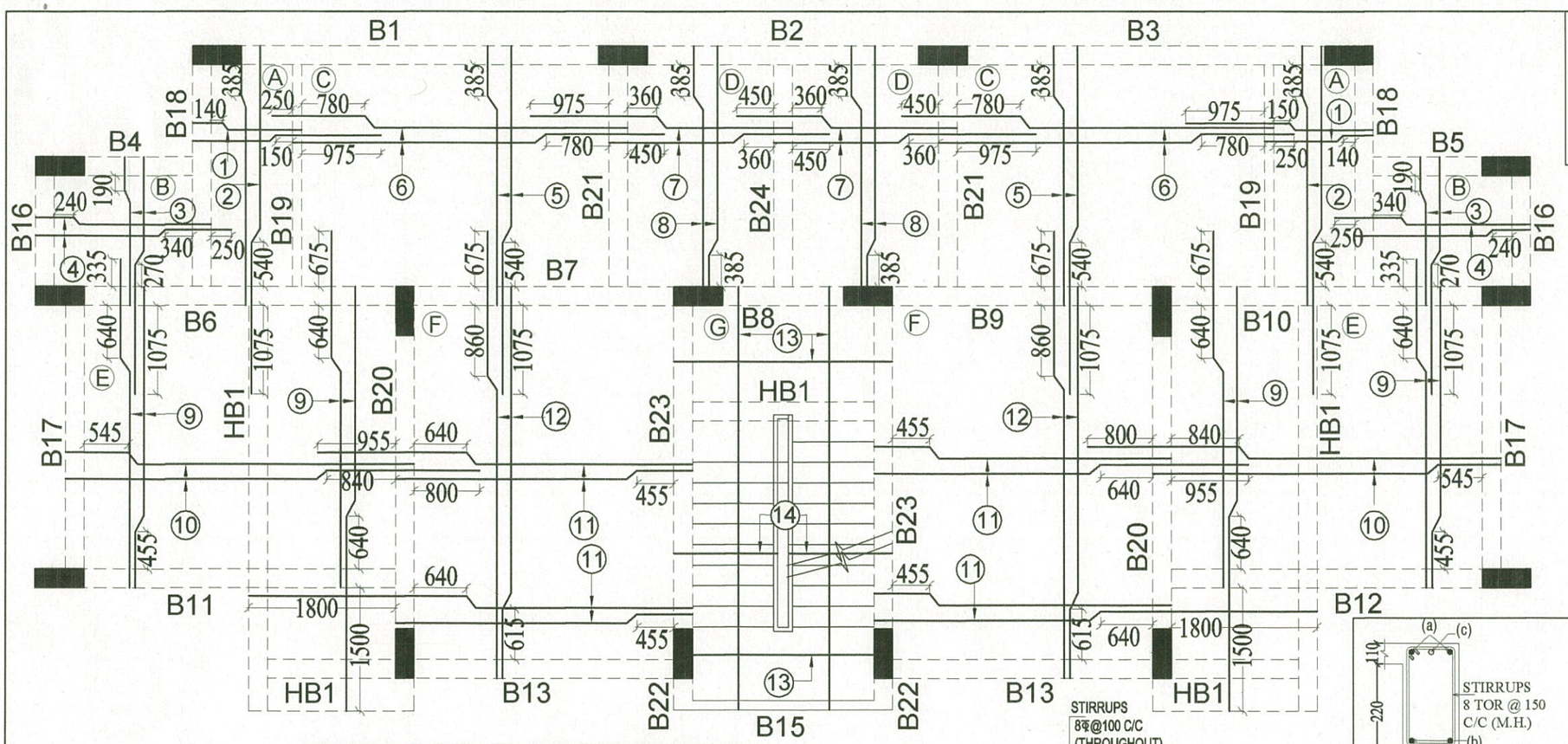

REINF. DETAIL OF ROOF SLAB WITH (BOTTOM BARS)

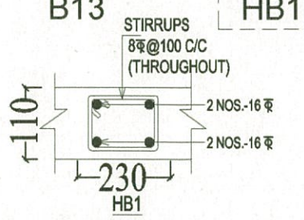

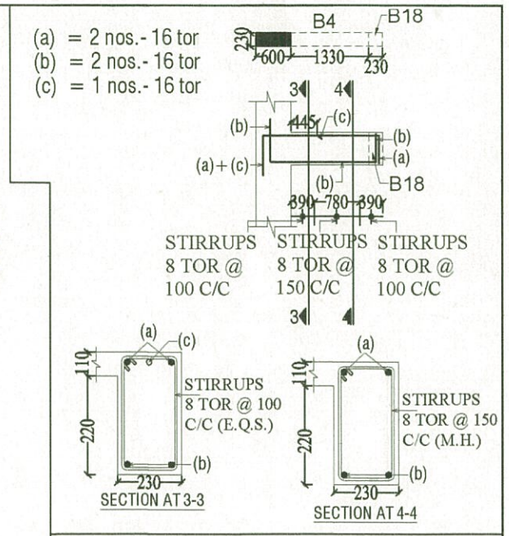

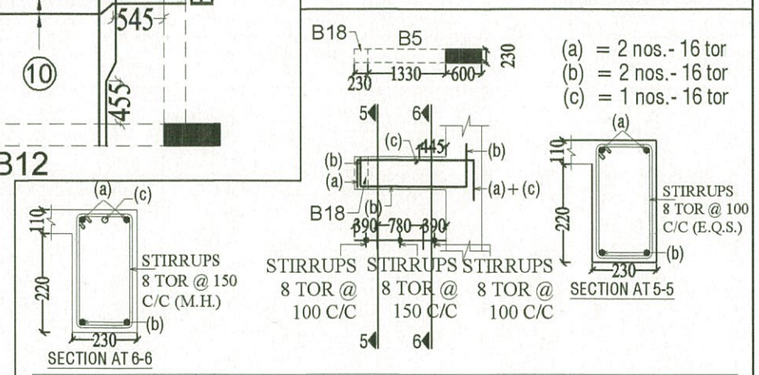

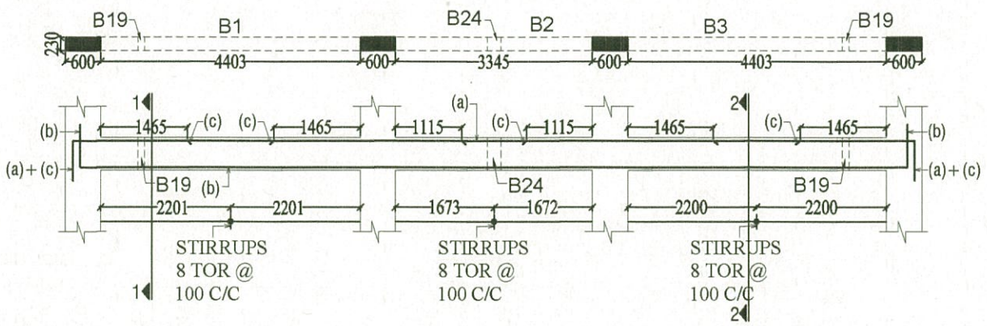

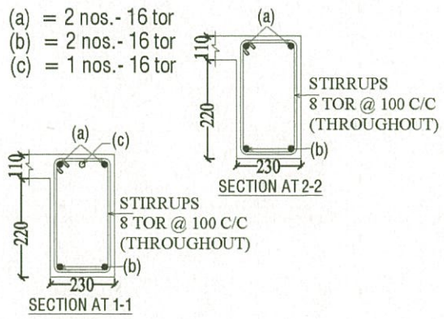

PANAL	BAR MARK	BAR DIA.	SPACING	DESCRIPTION
A (SLAB THICKNESS 110)	1	8 ϕ	200C/C	BOTTOM MAIN
	2	8 ϕ	200C/C	BOTTOM DIST.
B (SLAB THICKNESS 110)	3	8 ϕ	200C/C	BOTTOM MAIN
	4	8 ϕ	200C/C	BOTTOM DIST.
C (SLAB THICKNESS 110)	5	8 ϕ	200C/C	BOTTOM MAIN
	6	8 ϕ	200C/C	BOTTOM DIST.
D (SLAB THICKNESS 110)	7	8 ϕ	200C/C	BOTTOM MAIN
	8	8 ϕ	200C/C	BOTTOM DIST.
E (SLAB THICKNESS 110)	9	8 ϕ	140C/C	BOTTOM MAIN
	10	8 ϕ	150C/C	BOTTOM DIST.
F (SLAB THICKNESS 110)	11	8 ϕ	150C/C	BOTTOM MAIN
	12	8 ϕ	175C/C	BOTTOM DIST.
G (SLAB THICKNESS 110)	13	12 ϕ	130C/C	BOTTOM MAIN
	14	8 ϕ	150C/C	BOTTOM DIST.

PROJECT

TYPE - 2 RESIDENCE P.W.D. DEHRADUN

TITLE

REINFORCEMENT DETAILS OF ROOF SLAB & LONGITUDINAL BEAMS.

DRAWN	DATE	DRG. NO.	REV. NO.
RASHMI	30.08. 2012	TYPE- 2- STR.- 9	1

CONSULTANT :

SUNEET PRASAD
STRUCTURAL & CONSULTING ENGINEER

Suneet Prasad

SUNEET PRASAD
B. E., M. E. (CIVIL), M I V, F I V
AUTHORIZED STRUCTURAL ENGINEER
20, PHASE-I, ENGINEERS ENCLAVE
G.M.S. ROAD, DEHRADUN-248 001
REG. No: DoH - UK / ASE - III / 2008

Checked and approve
Gupta

SUBHASH CHANDRA GUPTA
B.E. Civil (Hon's), M. TECH. (Structure)
Reg. No. DOH-UK/ASE-VI/2008
University of Petrolium & Energy Studies

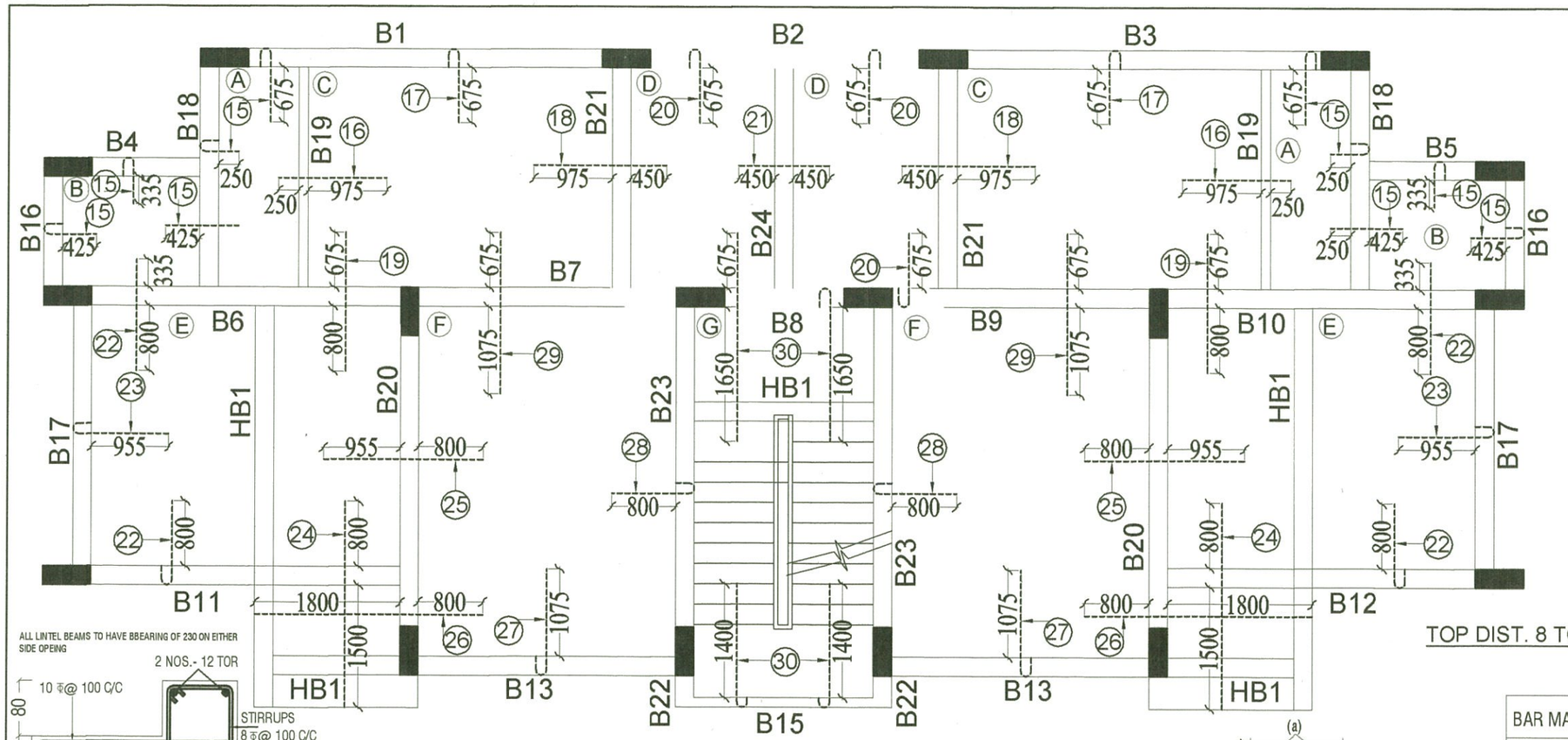

REINF. DETAIL OF ROOF SLAB WITH (TOP BARS)

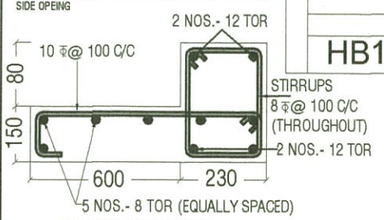

TYPICAL BEAM/ SUNSHADE DETAIL FOR OPENING UPTO 1500

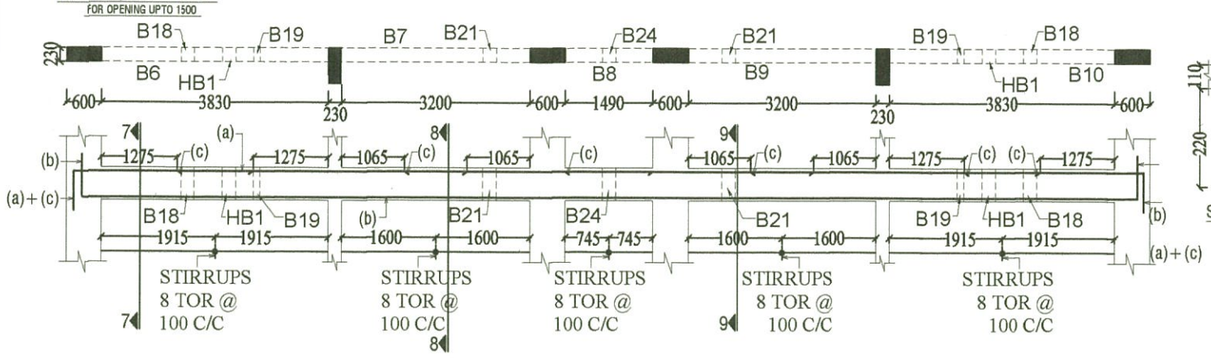

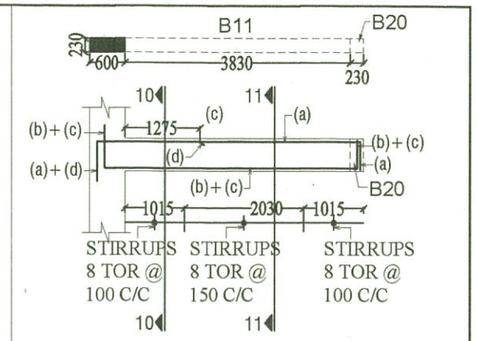

(a) = 2 nos.- 16 tor
(b) = 2 nos.- 16 tor
(c) = 1 nos.- 12 tor
(d) = 1 nos.- 16 tor

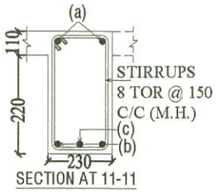

SECTION AT 11-11

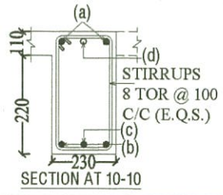

SECTION AT 10-10

TOP DIST. 8 TOR @ 200 C/C WHERE EVER REQUIRED.

(a) = 2 nos.- 16 tor
(b) = 2 nos.- 16 tor
(c) = 1 nos.- 16 tor

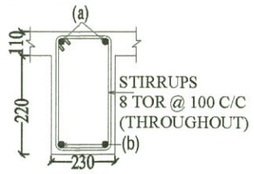

SECTION AT 8-8

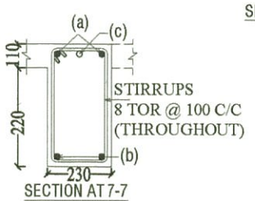

SECTION AT 7-7

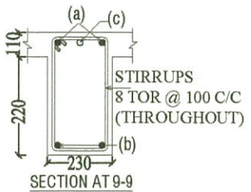

SECTION AT 9-9

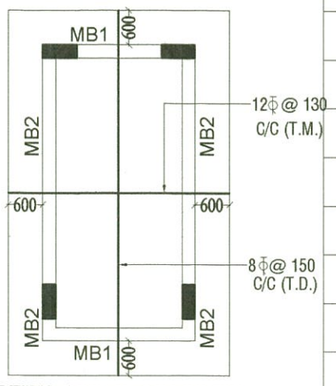

REINF. DETAIL OF MUMTY SLAB. TH. 330

BAR MARK	BAR DIA.	SPACING	DESCRIPTION
15	8 ϕ	400C/C	TOP MAIN
16	8 ϕ	400C/C	TOP MAIN
17	8 ϕ	400C/C	TOP MAIN
18	8 ϕ	350C/C	TOP MAIN
19	8 ϕ	300C/C	TOP MAIN
20	8 ϕ	400C/C	TOP MAIN
21	8 ϕ	400C/C	TOP MAIN
22	8 ϕ	280C/C	TOP MAIN
23	8 ϕ	300C/C	TOP MAIN
24	8 ϕ	280C/C	TOP MAIN
25	8 ϕ	280C/C	TOP MAIN
26	8 ϕ	300C/C	TOP MAIN
27	8 ϕ	350C/C	TOP MAIN
28	8 ϕ	300C/C	TOP MAIN
29	8 ϕ	350C/C	TOP MAIN
30	12 ϕ	130C/C	TOP MAIN

PROJECT

TYPE - 2 RESIDENCE P.W.D. DEHRADUN

TITLE

REINFORCEMENT DETAILS OF ROOF SLAB & LONGITUDINAL BEAMS.

DRAWN	DATE	DRG. NO.	REV. NO.
RASHMI	30.08. 2012	TYPE- 2- STR.-10	1

CONSULTANT :

SUNEET PRASAD
STRUCTURAL & CONSULTING ENGINEER

Suneet Prasad.

SUNEET PRASAD
B. E., M. E. (CIVIL), M I V, F I V
AUTHORIZED STRUCTURAL ENGINEER
20, PHASE-I, ENGINEERS ENCLAVE
G.M.S. ROAD, DEHRADUN-248 001
REG. No: DoH - UK / ASE - III / 2008

Checked and approve

SUBHASH CHANDRA GUPTA
B.E. Civil (Hon's), M. TECH. (Structure)
Reg. No. DOH-UK/ASE-VI/2008
University of Petrolium & Energy Studie

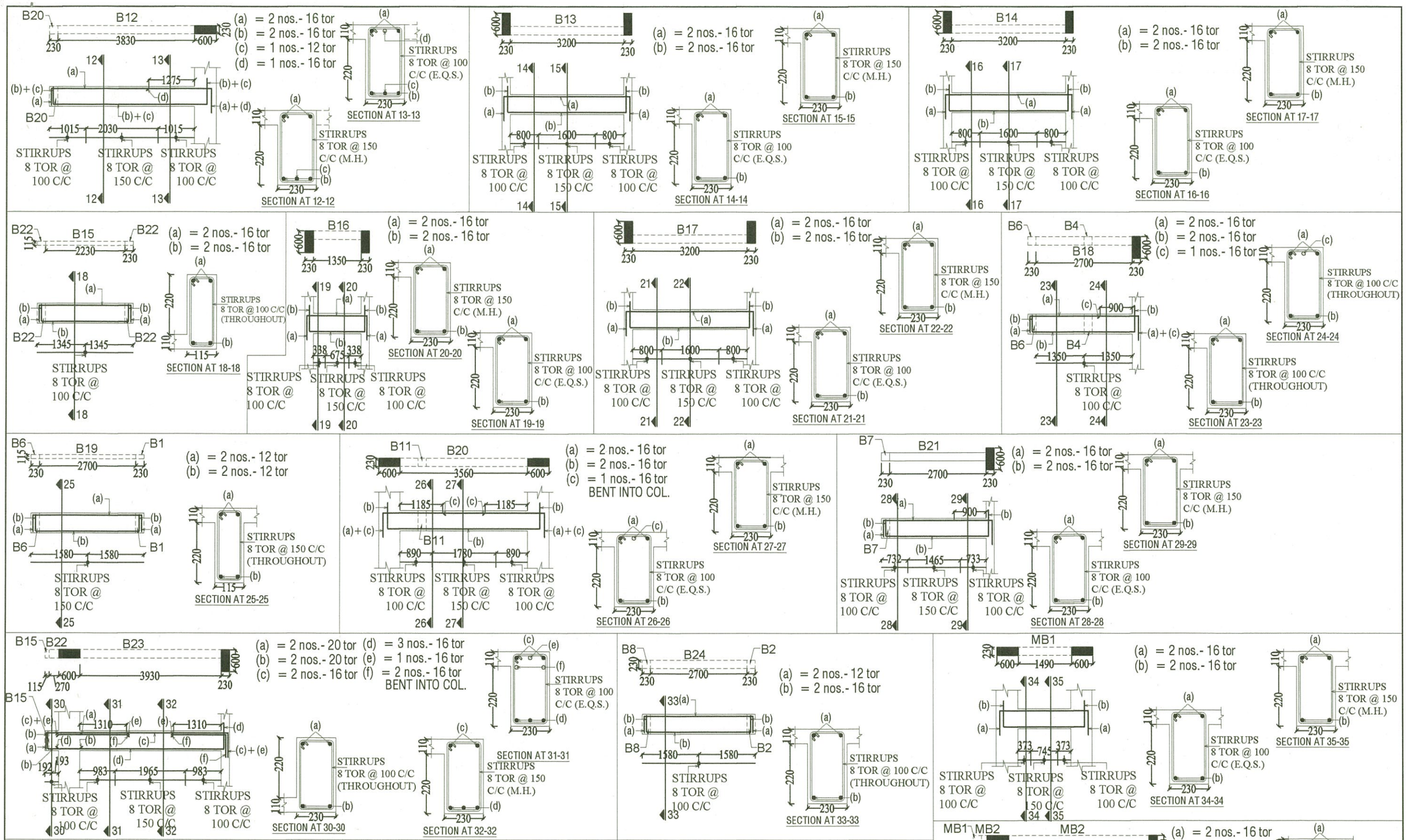

PROJECT

TYPE - 2 RESIDENCE P.W.D. DEHRADUN

TITLE

REINFORCEMENT DETAILS OF ROOF LONGITUDINAL BEAMS.

DRAWN	DATE	DRG. NO.	REV. NO.
RASHMI	30.08. 2012	TYPE- 2- STR.-11	1

CONSULTANT :

SUNEET PRASAD
STRUCTURAL & CONSULTING ENGINEER

Suneet Prasad.

SUNEET PRASAD
B. E., M. E. (CIVIL), M I V, F I V
AUTHORIZED STRUCTURAL ENGINEER
20, PHASE-I, ENGINEERS ENCLAVE
G.M.S. ROAD, DEHRADUN-248 001
REG. No: DoH - UK / ASE - III / 2008

Checked and approve

Gupta

SUBHASH CHANDRA GUPTA
B.E. Civil (Hon's), M. TECH. (Structure)
Reg. No. DOH-UK/ASE-VI/2008
University of Petrolium & Energy Studie

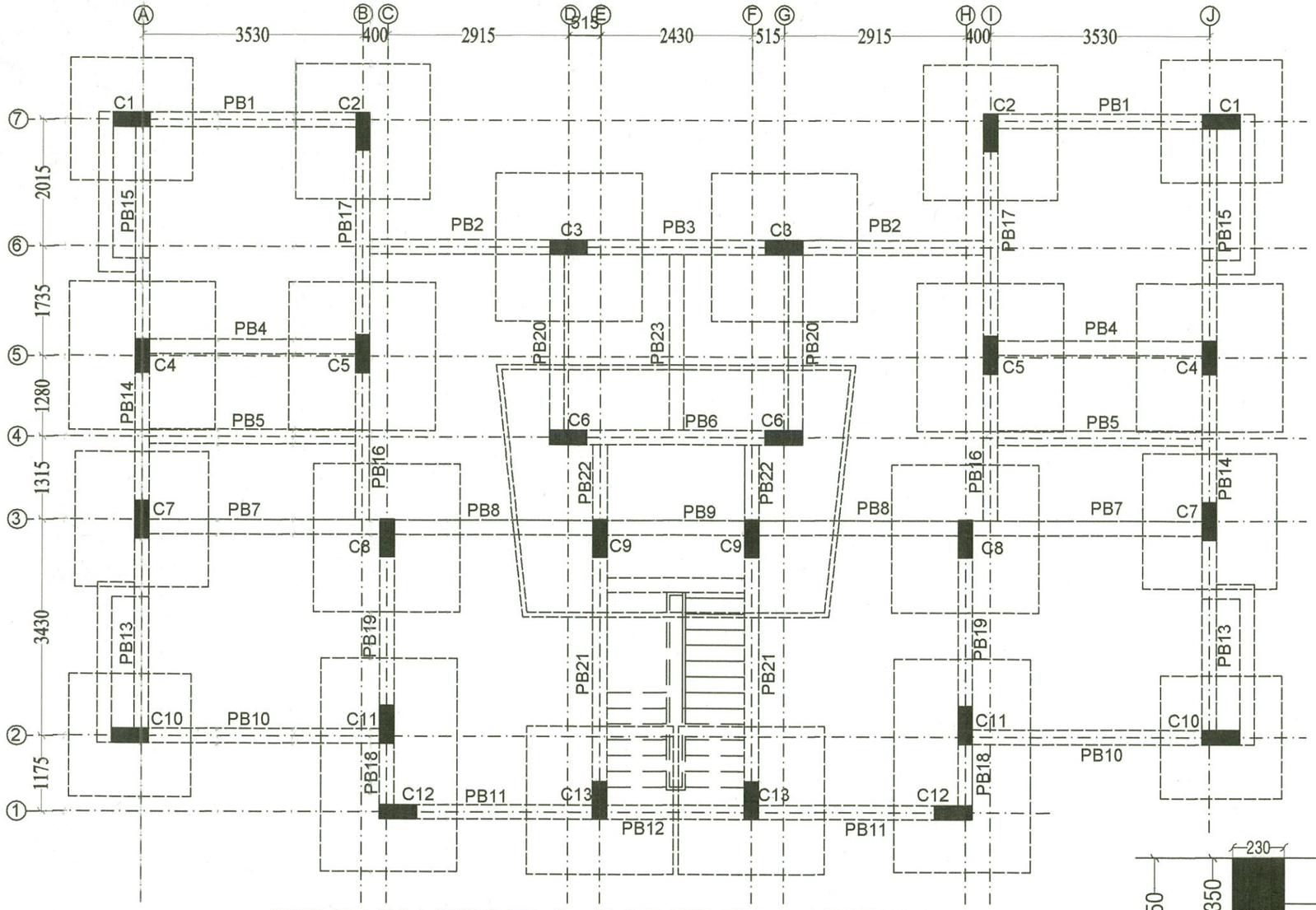

EXCAVATION & COLUMN LAYOUT PLAN

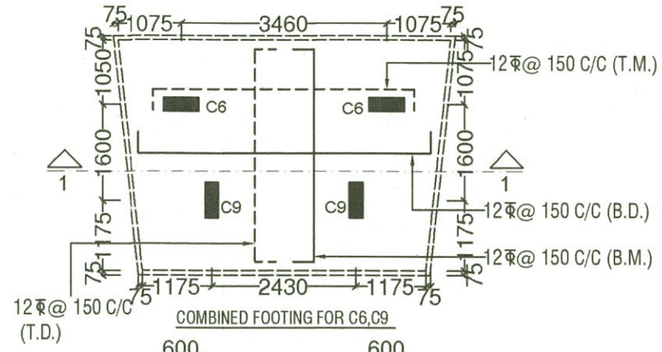

COMBINED FOOTING FOR C6,C9

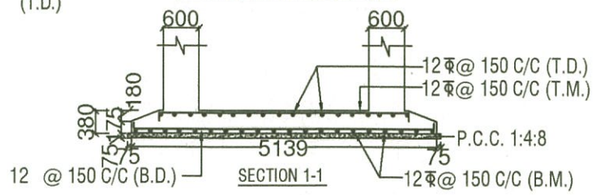

SECTION 1-1

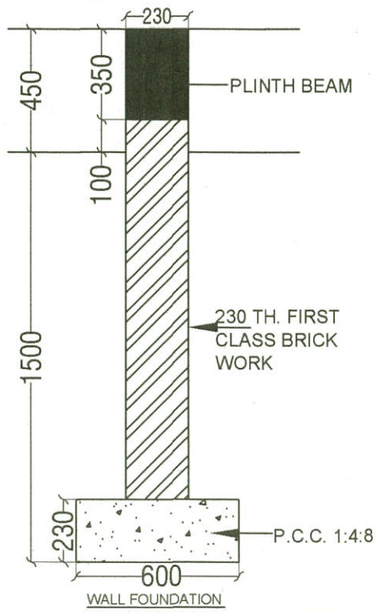

WALL FOUNDATION

NOTES

1. READ THIS DRAWING IN CONJUCTION WITH RELEVANT ARCH. DRAWING.
2. ALL DIMENSIONS IN MM.
3. M20 GRADE CONCRETE SHALL BE USED UNLESS NOTED OTHERWISE.
4. REINFORCEMENT BAR TO BE USED SHALL BE HIGH YIELD STRENGTH DEFORMED BAR STRESS 415N/mm^2
5. ANY LAP OF BAR SHALL NOT BE LESS THAN 50xDIA OF LARGER DIA.
6. CLEAR COVER TO MAIN REINF.SHALL BE AS FOLLOWS

FOOTINGS	-	50MM.
WALL	-	25MM.
COLUMN	-	40MM.
BEAM	-	25MM.
SLAB	-	20MM.

7. ALL STEEL SHOULD BE FREE OF RUST, SCALE ,GREASE, DIRT, OIL, ETC.
8. ALL CONCRETE TO BE MECHANICALLY MIXED AND VIBRATED
9. ALL CONCRETE TO BE PLACED AGAINST STEEL OR WATER ROOF PLY. PUCCA SHUTTERING
10. NET ALLOWABLE BEARING CAPACITY OF SOIL IS TAKEN AS 10.00 TONS / SQM. AT 1.50 M. DEPTH BELOW GROUND LEVEL.
11. BUILDING IS DESIGNED FOR GROUND +2 FLOORS.
12. BUILDING IS DESIGN FOR E.Q. ZONE IV.

PROJECT

TYPE - 3 RESIDENCE P.W.D. DEHRADUN

TITLE

EXCAVATION & COLUMN LAYOUT PLAN & COLUMN DETAILS.

DRAWN	DATE	DRG. NO.	REV. NO.
MANISHA	19.09. 2012	TYPE- 3- STR.- 1	1

CONSULTANT :

SUNEET PRASAD
STRUCTURAL & CONSULTING ENGINEER

Suneet Prasad
SUNEET PRASAD
B. E., M. E. (CIVIL), M I V, F I V
AUTHORIZED STRUCTURAL ENGINEER
20, PHASE-I, ENGINEERS ENCLAVE
G.M.S. ROAD, DEHRADUN-248 001
REG. No: DoH - UK / ASE - III / 2008

Checked and approve
Gupta

SUBHASH CHANDRA GUPTA
B.E. Civil (Hon's), M. TECH. (Structure)
Reg. No. DOH-UK/ASE-VI/2008
University of Petroleum & Energy Studies

COLS.	EXCAVATION SIZE	FOUNDATION SIZE IN (MM)							REINF. IN FOOTING		COLUMN REINF.
		L	B	D	l_1	b_1	a	b	nL	nB	
C1,C10	1950X1950	1800	1800	300	785	600	230	600	12 NOS.-12 ϕ	12 NOS.-12 ϕ	STIRRUPS 8 ϕ @ 75 C/C; 2 NOS.-20 ϕ; 2 NOS.-20 ϕ; 2 NOS.-20 ϕ; 2 NOS.-20 ϕ; 600; 230
C2,C5	2350X2350	2175	2175	380	985	800	230	600	17 NOS.-12 ϕ	17 NOS.-12 ϕ	STIRRUPS & LINKS 8 ϕ @ 75 C/C; 3 NOS.-20 ϕ; 2 NOS.-20 ϕ; 2 NOS.-20 ϕ; 2 NOS.-20 ϕ; 3 NOS.-20 ϕ; 600; 230
C3	2350X2350	2175	2175	380	985	835	230	530	17 NOS.-12 ϕ	17 NOS.-12 ϕ	STIRRUPS & LINKS 8 ϕ @ 75 C/C; 3 NOS.-20 ϕ; 2 NOS.-20 ϕ; 2 NOS.-20 ϕ; 2 NOS.-20 ϕ; 3 NOS.-20 ϕ; 530; 230
C4	2350X2350	2175	2175	380	985	835	230	530	17 NOS.-12 ϕ	17 NOS.-12 ϕ	STIRRUPS & LINKS 8 ϕ @ 75 C/C; 3 NOS.-20 ϕ; 2 NOS.-20 ϕ; 2 NOS.-20 ϕ; 2 NOS.-20 ϕ; 3 NOS.-20 ϕ; 530; 230
C7	2150X2150	1750	1750	380	885	735	230	530	13 NOS.-12 ϕ	13 NOS.-12 ϕ	STIRRUPS & LINKS 8 ϕ @ 75 C/C; 3 NOS.-25 ϕ; 2 NOS.-25 ϕ; 2 NOS.-25 ϕ; 3 NOS.-25 ϕ; 530; 230
C8	2350X2350	2175	2175	380	985	800	230	600	17 NOS.-12 ϕ	17 NOS.-12 ϕ	STIRRUPS & LINKS 8 ϕ @ 75 C/C; 3 NOS.-25 ϕ; 2 NOS.-25 ϕ; 2 NOS.-25 ϕ; 3 NOS.-25 ϕ; 600; 230
C13	2350X2350	2175	2175	380	985	800	230	600	17 NOS.-12 ϕ	17 NOS.-12 ϕ	STIRRUPS & LINKS 8 ϕ @ 75 C/C; 3 NOS.-20 ϕ; 2 NOS.-20 ϕ; 2 NOS.-20 ϕ; 2 NOS.-20 ϕ; 3 NOS.-20 ϕ; 600; 230

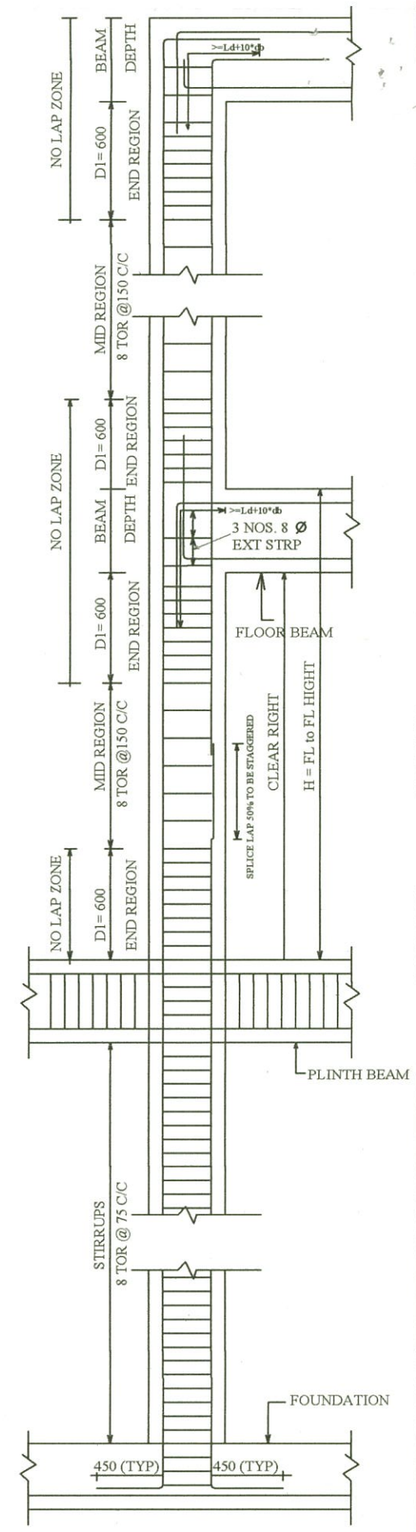

COLUMN (L) TIE AND SPLICE DETAIL

STIRRUPS END REGION 8ϕ @ 75 C/C
MID REGION 8ϕ @ 150 C/C

d_b = DIA OF BAR

12ϕ	16ϕ	20ϕ	25ϕ	28ϕ
550	750	950	1150	1300

DEVELOPMENT LENGTH = Ld + 10 * d_b

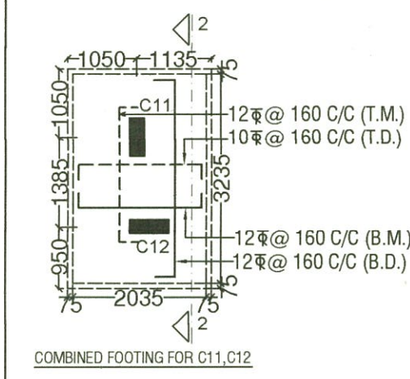

COMBINED FOOTING FOR C11,C12

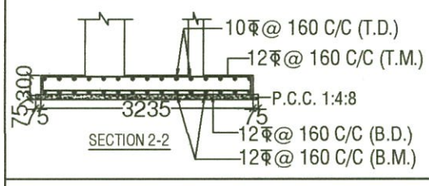

SECTION 2-2

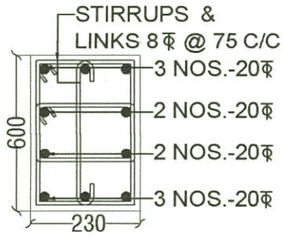

C6,C11

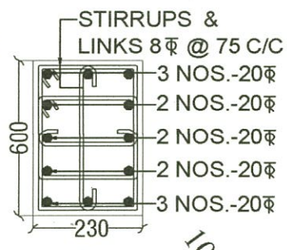

C9

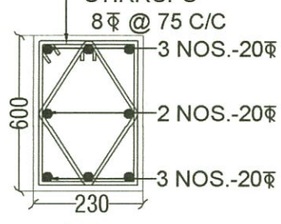

C12

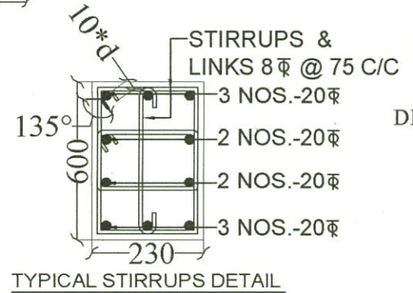

TYPICAL STIRRUPS DETAIL
d = DIA OF BAR

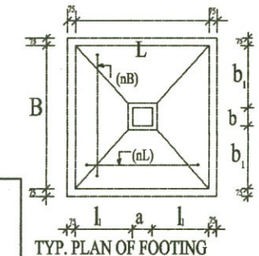

TYP. PLAN OF FOOTING

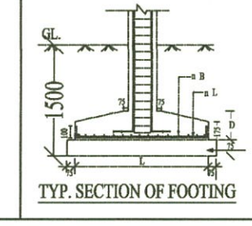

TYP. SECTION OF FOOTING

PROJECT

TYPE - 3 RESIDENCE P.W.D. DEHRADUN

TITLE

EXCAVATION & COLUMN LAYOUT PLAN & COLUMN DETAILS.

DRAWN	DATE	DRG. NO.	REV. NO.
MANISHA	19.09. 2012	TYPE- 3- STR.- 2	1

CONSULTANT :

SUNEET PRASAD
STRUCTURAL & CONSULTING ENGINEER

Suneet Prasad.

SUNEET PRASAD
B. E., M. E. (CIVIL), M I V, F I V
AUTHORIZED STRUCTURAL ENGINEER
20, PHASE-I, ENGINEERS ENCLAVE
G.M.S. ROAD, DEHRADUN-248 001
REG. No: DoH - UK / ASE - III / 2008

Checked and approve

Gupta

SUBHASH CHANDRA GUPTA
B.E. Civil (H n's), M. TECH. (Structure)
Reg. No /2008
University Studies

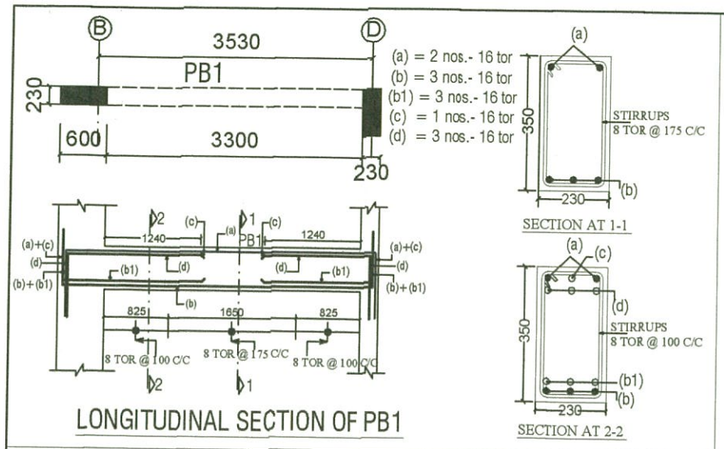

LONGITUDINAL SECTION OF PB1

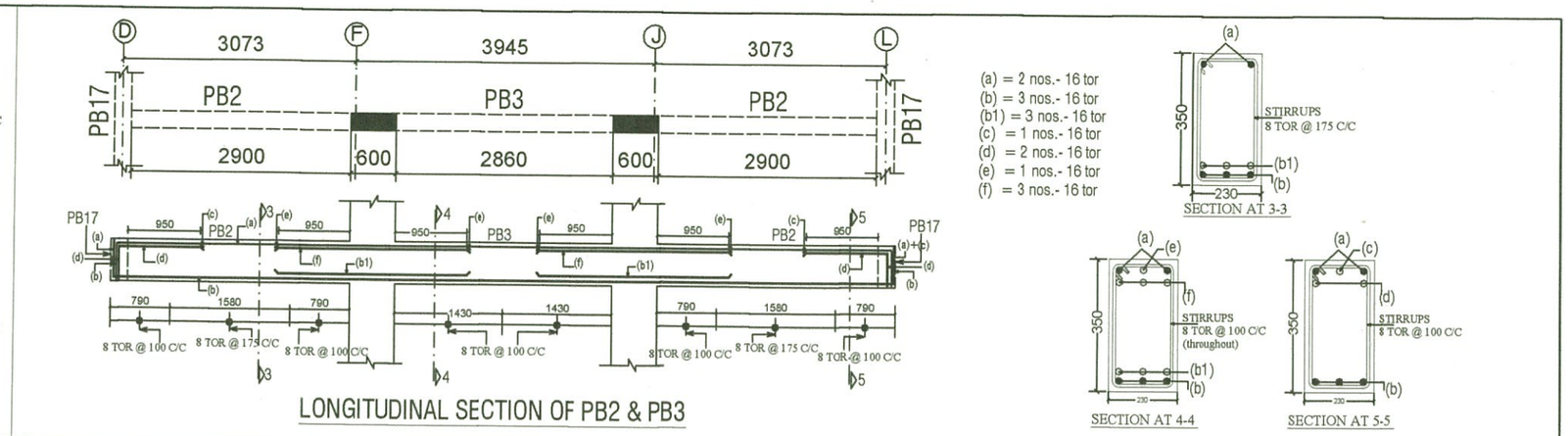

LONGITUDINAL SECTION OF PB2 & PB3

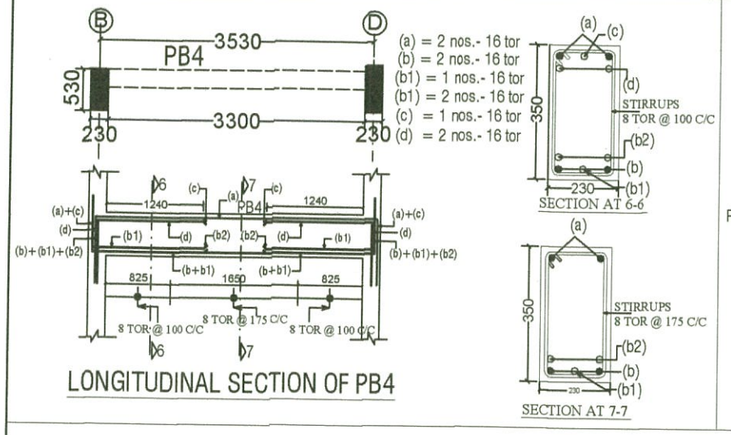

LONGITUDINAL SECTION OF PB4

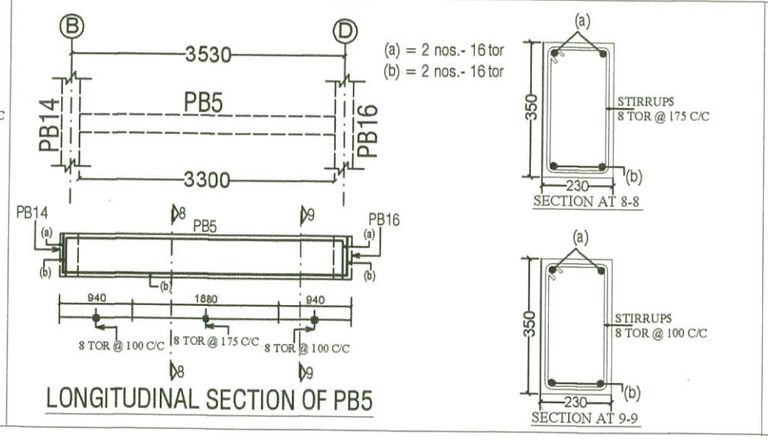

LONGITUDINAL SECTION OF PB5

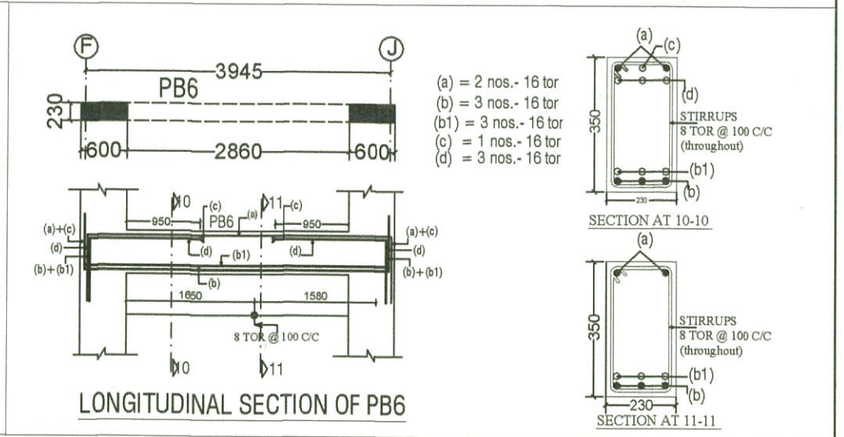

LONGITUDINAL SECTION OF PB6

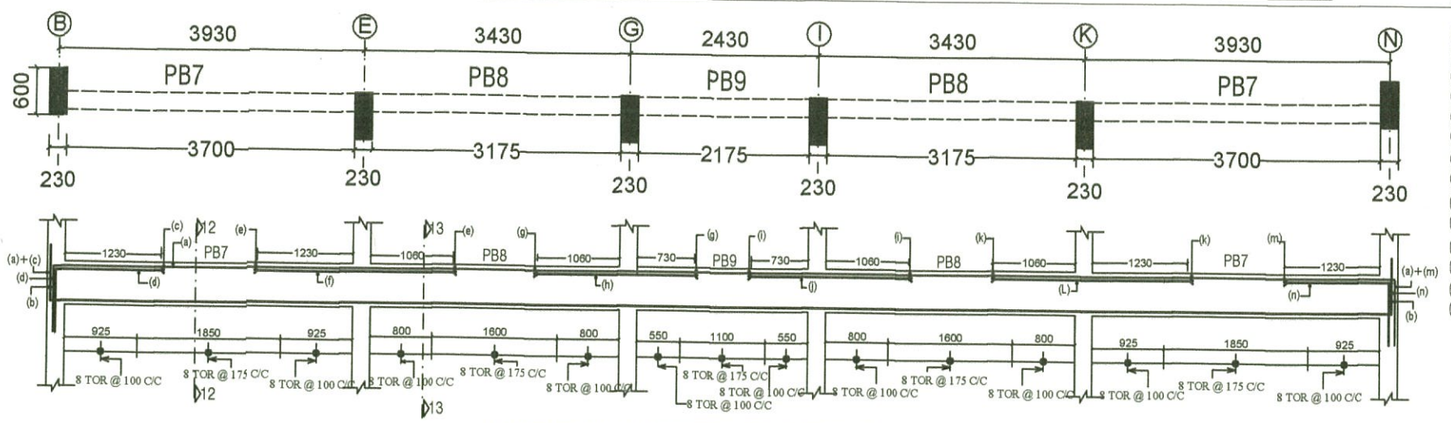

LONGITUDINAL SECTION OF PB7,PB8 & PB9

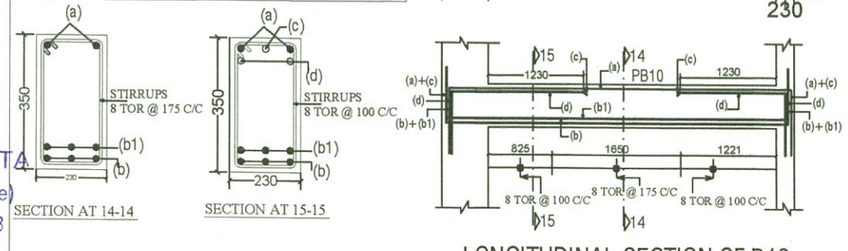

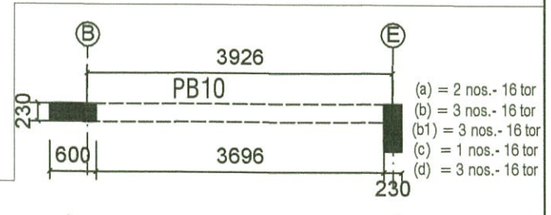

LONGITUDINAL SECTION OF B10

PROJECT

TYPE - 3 RESIDENCE P.W.D. DEHRADUN

TITLE

REINF. DETAIL OF PLINTH BEAMS.

DRAWN	DATE	DRG. NO.	REV. NO.
MANISHA	19.09. 2012	TYPE- 3- STR.- 3	1

CONSULTANT :

SUNEET PRASAD
STRUCTURAL & CONSULTING ENGINEER
Suneet Prasad
SUNEET PRASAD
B. E., M. E. (CIVIL),
AUTHORIZED STRUCTURAL ENGINEER
20, PHASE-I, ENGINEERS ENCLAVE
G.M.S. ROAD, DEHRADUN
REG. No: DoH - UK / ASE

Checked and approve

SUBHASH CHANDRA GUPTA
B.E. Civil (Hons), M. TECH. (Structure)
Reg. No. DOH-UK/ASE-VI/2008
University of Petroleum

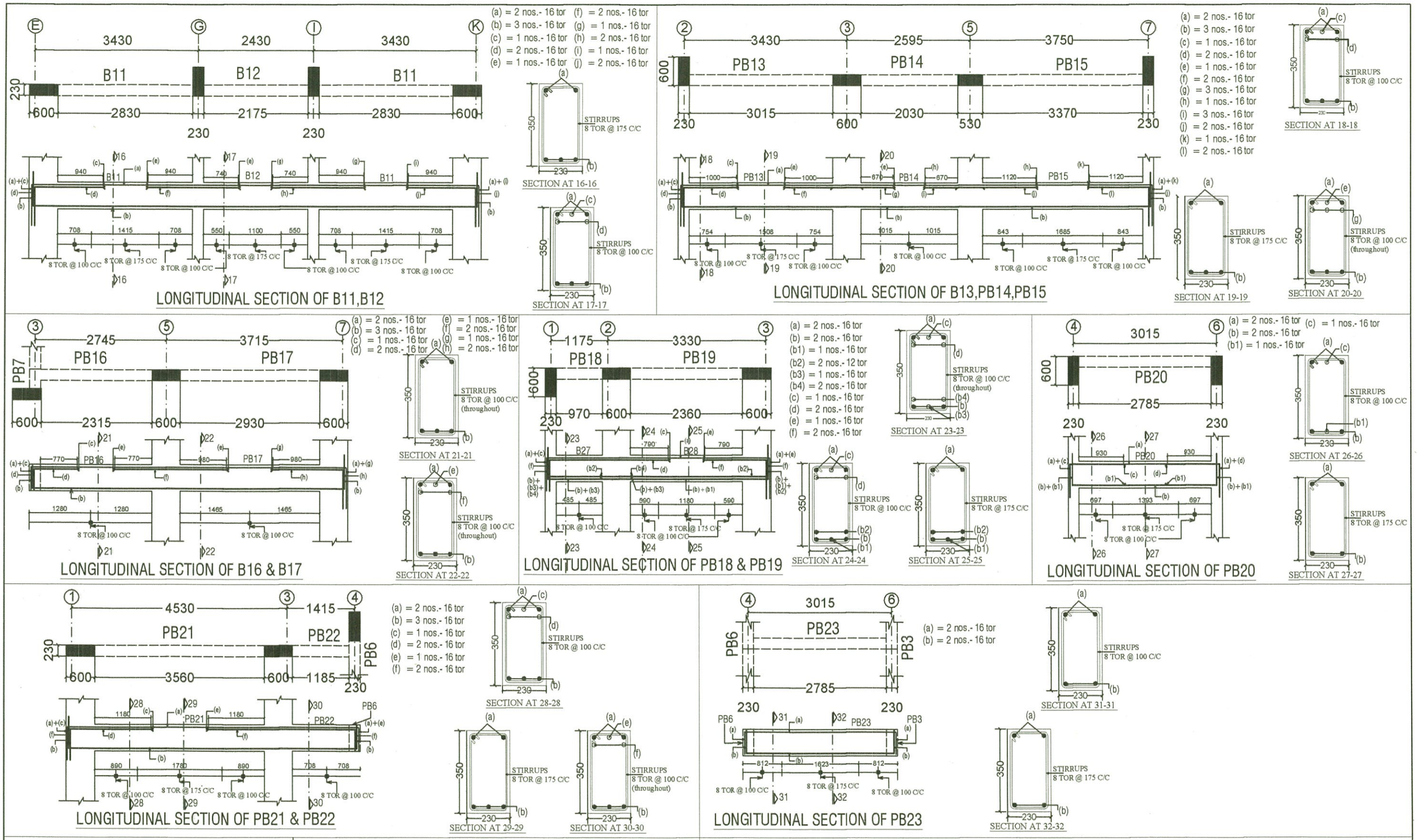

PROJECT

TYPE - 3 RESIDENCE P.W.D. DEHRADUN

TITLE

REINF. DETAIL OF PLINTH BEAMS.

DRAWN	DATE	DRG. NO.	REV. NO.
MANISHA	19.09. 2012	TYPE- 3- STR.- 4	1

CONSULTANT :

SUNEET PRASAD
STRUCTURAL & CONSULTING ENGINEER

Suneet Prasad
SUNEET PRASAD
B. E., M. E. (CIVIL), M I V, F I V
AUTHORIZED STRUCTURAL ENGINEER
20, PHASE-I, ENGINEERS ENCLAVE
G.M.S. ROAD, DEHRADUN-248 001
REG. No: DoH - UK / ASE - III / 2008

Checked and approve

Gupta
SUBHASH CHANDRA GUPTA
B.E. Civil (Hon's), M. TECH. (Structure)
Reg. No. DOH-UK/ASE-VI/2008
University of Petrolium & Energy Studies

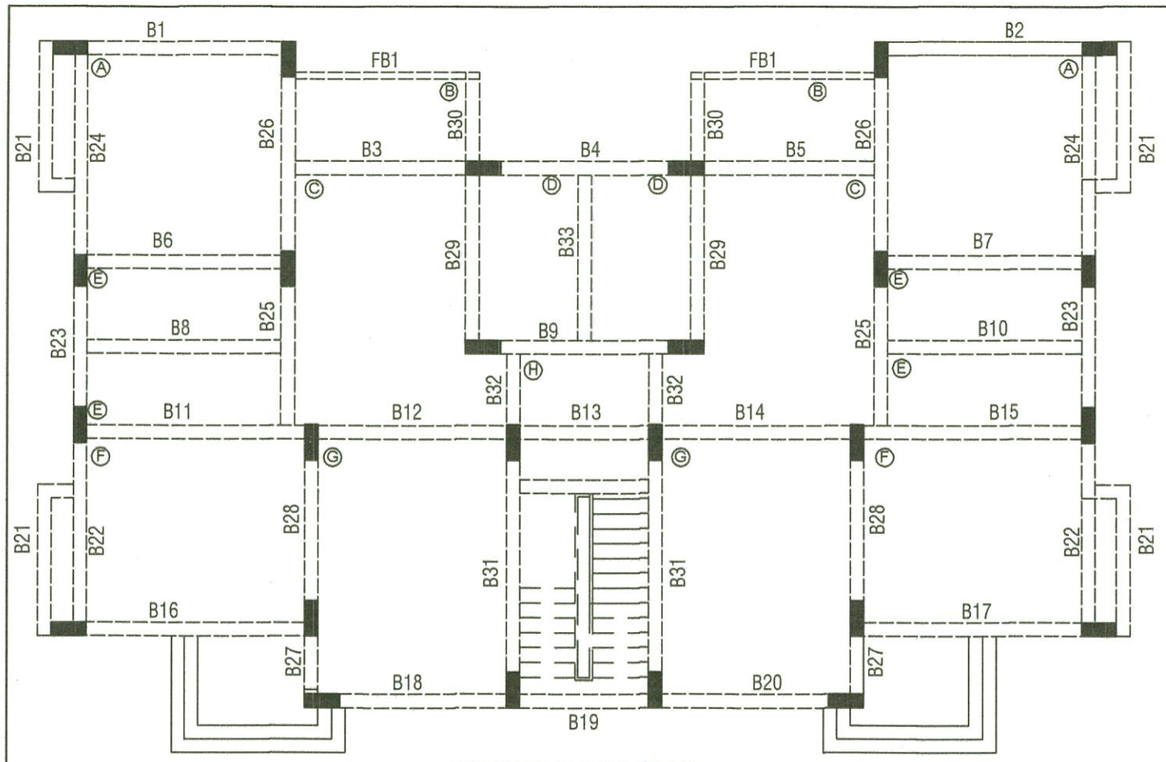

TYPICAL FLOOR SLAB

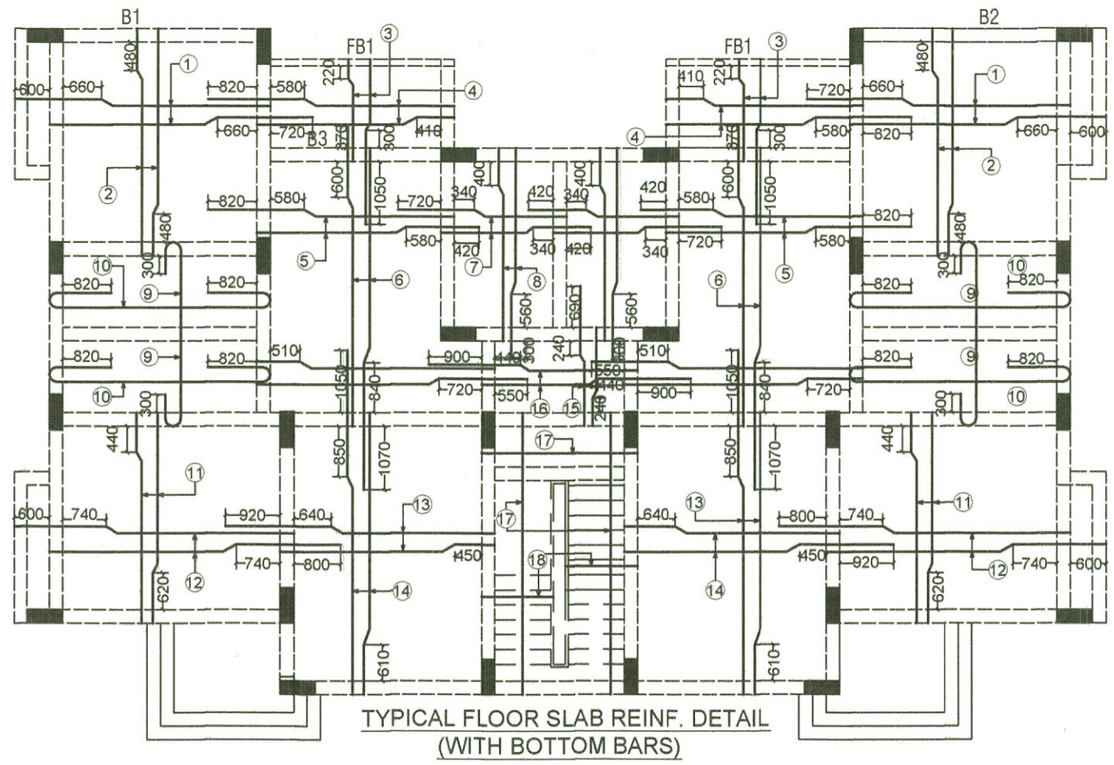

TYPICAL FLOOR SLAB REINF. DETAIL
(WITH BOTTOM BARS)

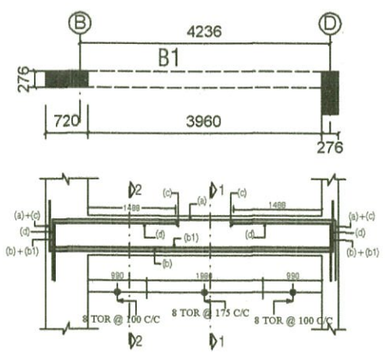

LONGITUDINAL SECTION OF B1

(a) = 2 nos.- 16 tor
(b) = 3 nos.- 16 tor
(b1) = 2 nos.- 12 tor
(c) = 1 nos.- 16 tor
(d) = 2 nos.- 16 tor

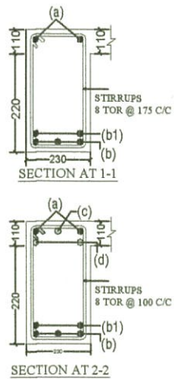

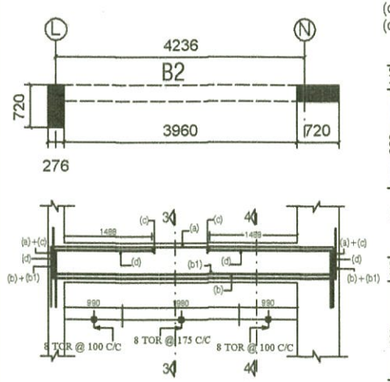

LONGITUDINAL SECTION OF B2

(a) = 2 nos.- 16 tor
(b) = 3 nos.- 16 tor
(b1) = 2 nos.- 12 tor
(c) = 1 nos.- 16 tor
(d) = 2 nos.- 16 tor

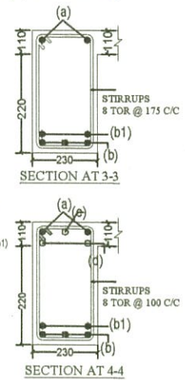

(a) = 2 nos.- 16 tor
(b) = 3 nos.- 16 tor
(b1) = 2 nos.- 12 tor
(c) = 1 nos.- 16 tor
(d) = 2 nos.- 16 tor

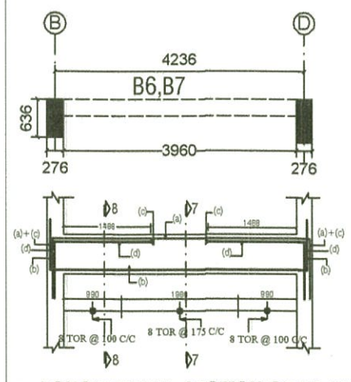

LONGITUDINAL SECTION OF B6,B7

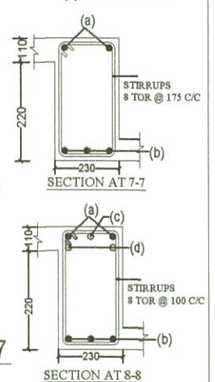

PANAL	BAR MARK	BAR DIA.	SPACING	DESCRIPTION
Ⓐ (SLAB THICKNESS 110)	1	8 Φ	175C/C	BOTTOM MAIN
	2	8 Φ	175C/C	BOTTOM DIST.
Ⓑ (SLAB THICKNESS 110)	3	8 Φ	200C/C	BOTTOM MAIN
	4	8 Φ	200C/C	BOTTOM DIST.
Ⓒ (SLAB THICKNESS 110)	5	8 Φ	175C/C	BOTTOM MAIN
	6	8 Φ	200C/C	BOTTOM DIST.
Ⓓ (SLAB THICKNESS 110)	7	8 Φ	200C/C	BOTTOM MAIN
	8	8 Φ	200C/C	BOTTOM DIST.
Ⓔ (SLAB THICKNESS 110)	9	8 Φ	200C/C	BOTTOM MAIN
	10	8 Φ	200C/C	BOTTOM DIST.
Ⓕ (SLAB THICKNESS 110)	11	8 Φ	175C/C	BOTTOM MAIN
	12	8 Φ	175C/C	BOTTOM DIST.
Ⓖ (SLAB THICKNESS 110)	13	8 Φ	150C/C	BOTTOM MAIN
	14	8 Φ	175C/C	BOTTOM DIST.
Ⓗ (SLAB THICKNESS 110)	15	8 Φ	200C/C	BOTTOM MAIN
	16	8 Φ	200C/C	BOTTOM DIST.
staircase (SLAB THICKNESS 110)	17	12Φ	125C/C	BOTTOM MAIN
	18	8 Φ	150C/C	BOTTOM DIST.

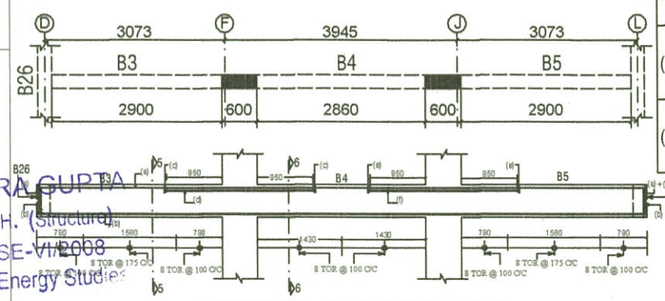

LONGITUDINAL SECTION OF B3,B4 & B5

(a) = 2 nos.- 16 tor
(b) = 3 nos.- 16 tor
(c) = 1 nos.- 16 tor
(d) = 3 nos.- 16 tor
(e) = 1 nos.- 16 tor
(f) = 3 nos.- 16 tor

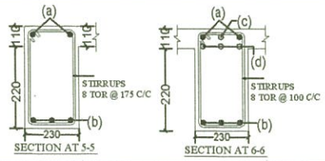

PROJECT

TYPE - 3 RESIDENCE P.W.D. DEHRADUN

TITLE

REINF. DETAIL OF TYPICAL FLOOR SLAB & BEAMS.

DRAWN	DATE	DRG. NO.	REV. NO.
MANISHA	19.09. 2012	TYPE- 3- STR.- 5	1

CONSULTANT :

SUNEET PRASAD
STRUCTURAL &
CONSULTING ENGINEER

Suneet Prasad

SUNEET PRASAD
B. E., M. E. (CIVIL), M I V, F I V
AUTHORIZED STRUCTURAL ENGINEER
20, PHASE-I, ENGINEERS ENCLAVE
G.M.S. ROAD, DEHRADUN-248 001
REG. No: DoH - UK / ASE - III / 2008

Checked and approve

SUBHASH CHANDRA GUPTA
B.E. Civil (Hon's), M. TECH. (Structural)
Reg. No. DOH-UK/ASE-VI/2008
University of Petrolium & Energy Studies

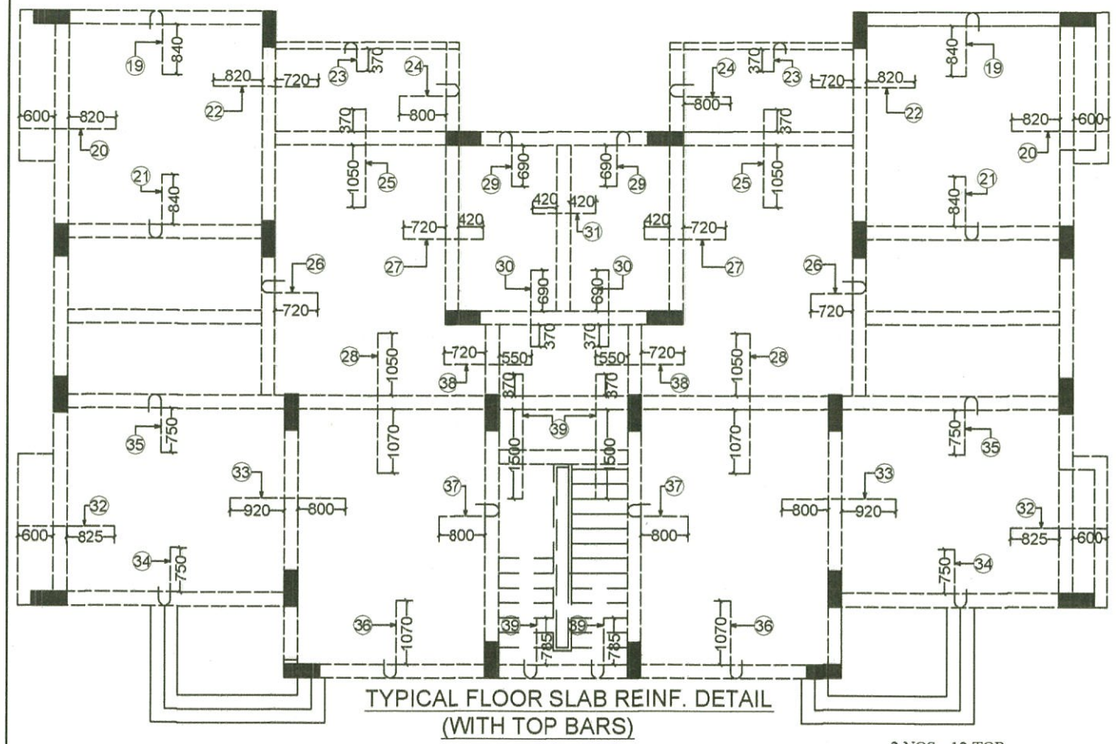

TYPICAL FLOOR SLAB REINF. DETAIL
(WITH TOP BARS)

TOP DIST. 8 TOR @ 200 C/C WHERE EVER REQUIRED.

ALL LINTEL BEAMS TO HAVE BBEARING OF 230 ON EITHER SIDE OPEING

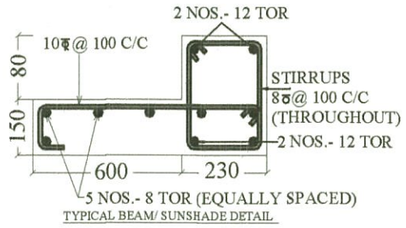

TYPICAL BEAM/ SUNSHADE DETAIL

BAR MARK	BAR DIA.	SPACING	DESCRIPTION
19	8Φ	400C/C	TOP MAIN
20	8Φ	400C/C	TOP MAIN
21	8Φ	400C/C	TOP MAIN
22	8Φ	350C/C	TOP MAIN
23	8Φ	300C/C	TOP MAIN
24	8Φ	400C/C	TOP MAIN
25	8Φ	400C/C	TOP MAIN
26	8Φ	300C/C	TOP MAIN
27	8Φ	350C/C	TOP MAIN
28	8Φ	300C/C	TOP MAIN
29	8Φ	300C/C	TOP MAIN
30	8Φ	300C/C	TOP MAIN
31	8Φ	350C/C	TOP MAIN
32	8Φ	300C/C	TOP MAIN
33	8Φ	350C/C	TOP MAIN
34	8Φ	130C/C	TOP MAIN
35	8Φ	350C/C	TOP MAIN
36	8Φ	300C/C	TOP MAIN
37	8Φ	350C/C	TOP MAIN
38	8Φ	130C/C	TOP MAIN
39	12Φ	125C/C	TOP MAIN

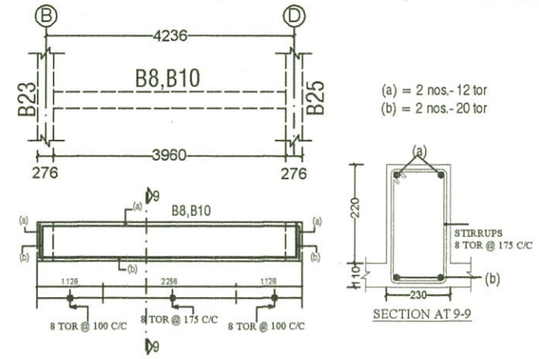

LONGITUDINAL SECTION OF B8,B10

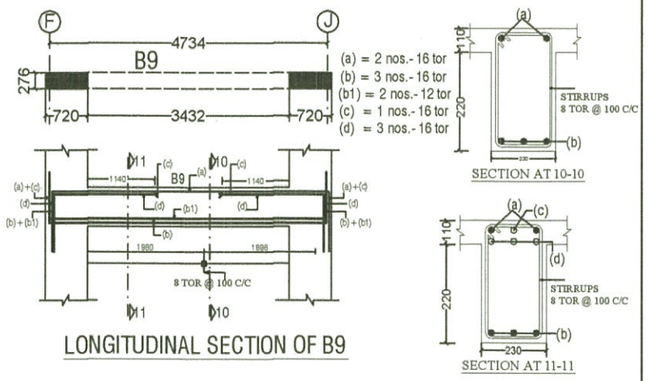

LONGITUDINAL SECTION OF B9

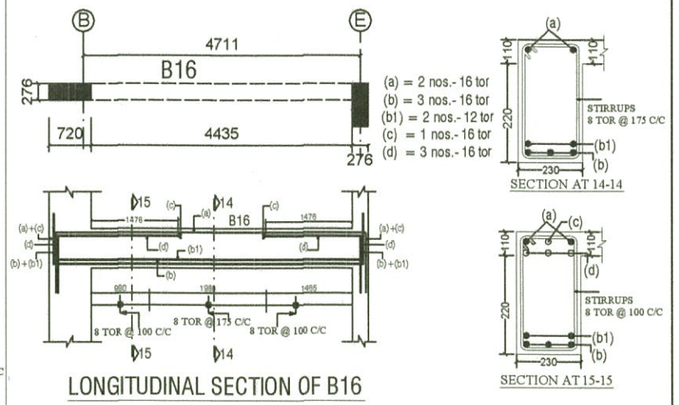

LONGITUDINAL SECTION OF B16

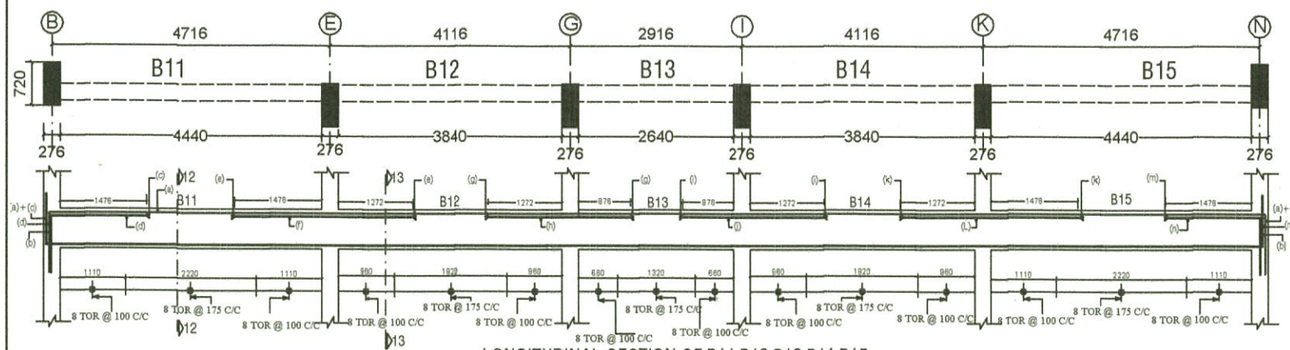

LONGITUDINAL SECTION OF B11,B12,B13,B14,B15

(a) = 2 nos.- 16 tor
(b) = 3 nos.- 16 tor
(c) = 1 nos.- 16 tor
(d) = 3 nos.- 16 tor
(e) = 1 nos.- 16 tor
(f) = 3 nos.- 16 tor
(g) = 1 nos.- 16 tor
(h) = 3 nos.- 16 tor
(i) = 1 nos.- 16 tor
(j) = 3 nos.- 16 tor
(k) = 1 nos.- 16 tor
(L) = 3 nos.- 16 tor
(m) = 1 nos.- 16 tor
(n) = 3 nos.- 16 tor

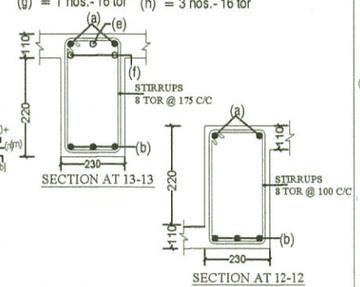

PROJECT

TYPE - 3 RESIDENCE P.W.D. DEHRADUN

TITLE

REINF. DETAIL OF TYPICAL FLOOR SLAB & BEAMS.

DRAWN	DATE	DRG. NO.	REV. NO.
MANISHA	19.09. 2012	TYPE- 3- STR.- 6	1

CONSULTANT :

SUNEET PRASAD
STRUCTURAL & CONSULTING ENGINEER

Suneet Prasad
SUNEET PRASAD
B. E., M. E. (CIVIL), M I V, F I V
AUTHORIZED STRUCTURAL ENGINEER
20, PHASE-I, ENGINEERS ENCLAVE
G.M.S. ROAD, DEHRADUN-248 00
REG. No. DoH-UK/ASE-III/ 200

Checked and approve
Gupta
SUBHASH CHANDRA GUPTA
B.E. Civil (Hon's), M. TECH. (Structure)
Reg. No. DOH-UK/ASE-VI/2008
University of Petrolium & Energy Studie

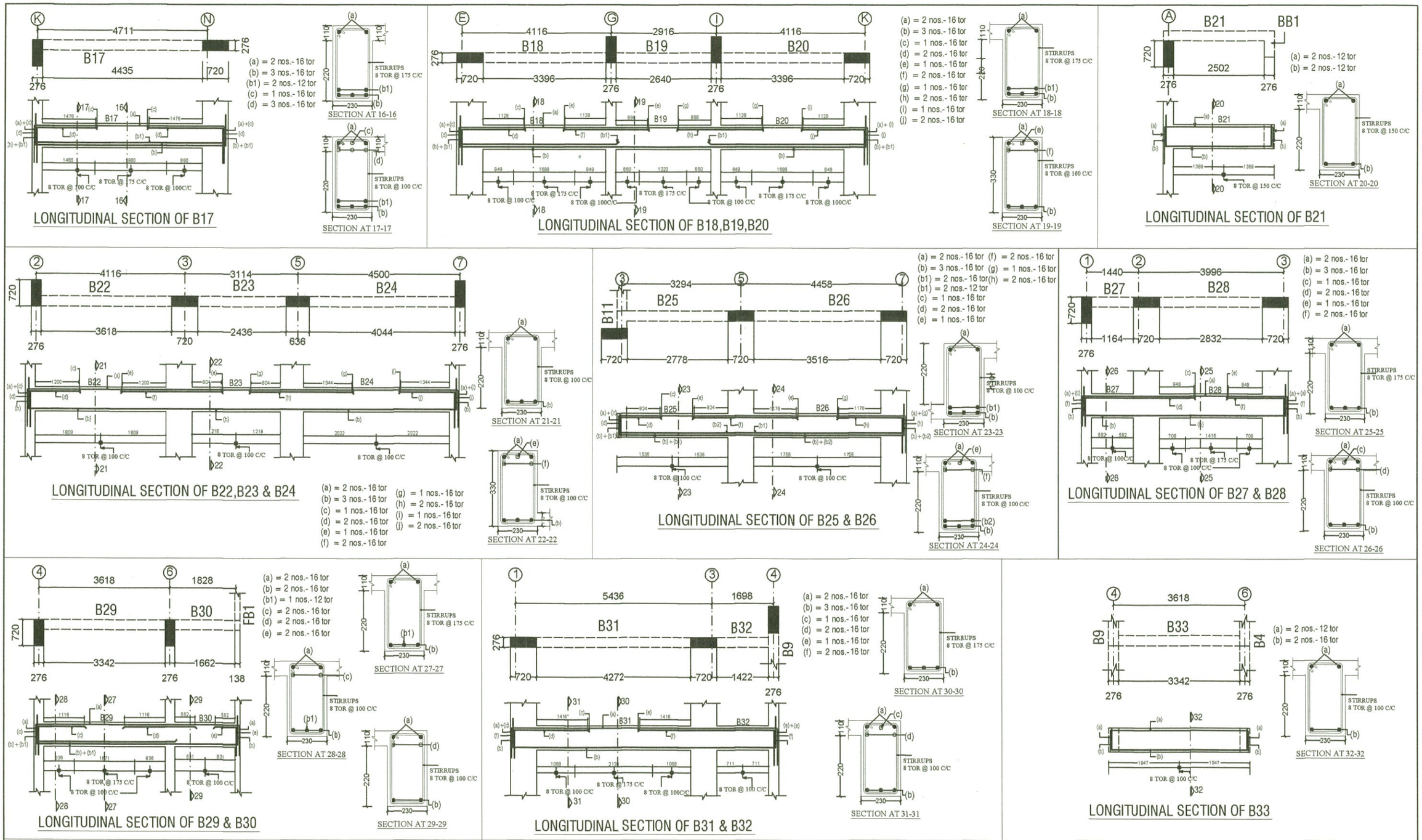

PROJECT

TYPE - 3 RESIDENCE P.W.D. DEHRADUN

TITLE

REINF. DETAIL OF TYPICAL FLOOR BEAMS.

DRAWN	DATE	DRG. NO.	REV. NO.
MANISHA	19.09. 2012	TYPE- 3- STR.- 7	1

CONSULTANT :

SUNEET PRASAD
STRUCTURAL & CONSULTING ENGINEER

Suneet Prasad
SUNEET PRASAD
B. E., M. E. (CIVIL), M I V, F I V
AUTHORIZED STRUCTURAL ENGINEER
20, PHASE-I, ENGINEERS ENCLAVE
G.M.S. ROAD, DEHRADUN-248 001
REG. No: DoH - UK / ASE - III / 2008

Checked and approve

SUBHASH CHANDRA GUPTA
B.E. Civil (Hon's), M. TECH. (Structure)
Reg. No. DOH-UK/ASE-VI/2008
University of Petrolium & Energy Studie

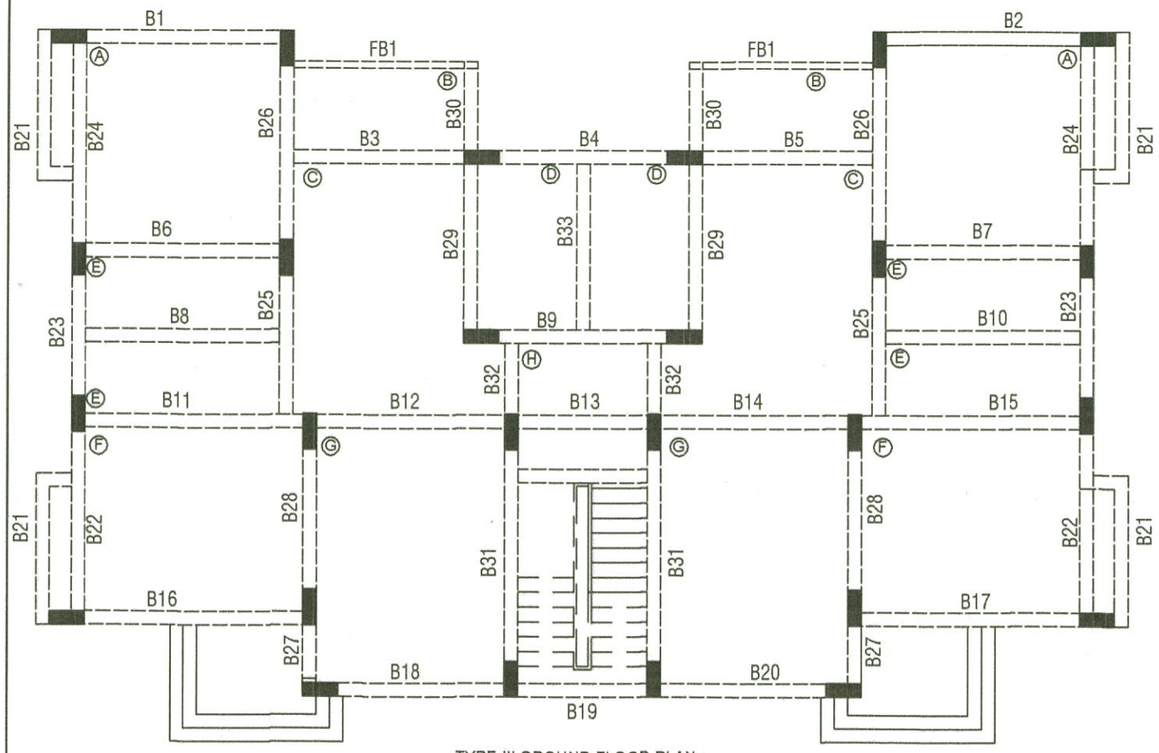

TYPE-III GROUND FLOOR PLAN
COVD.AREA-79.00 SQM.

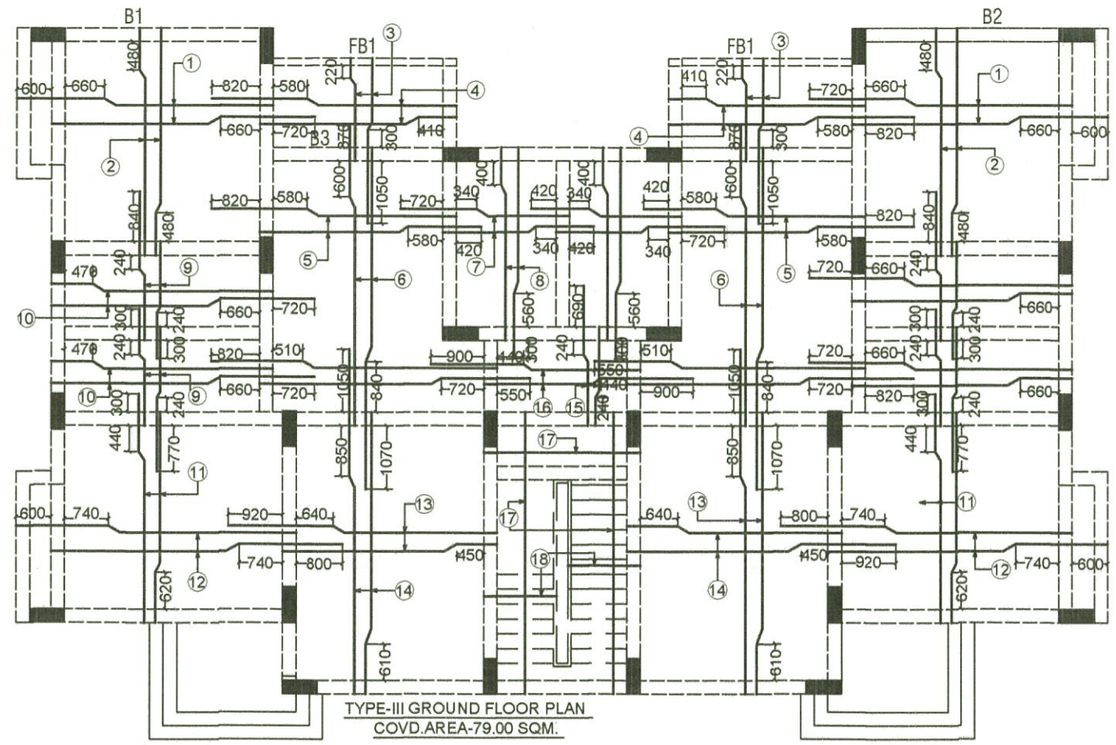

TYPE-III GROUND FLOOR PLAN
COVD.AREA-79.00 SQM.

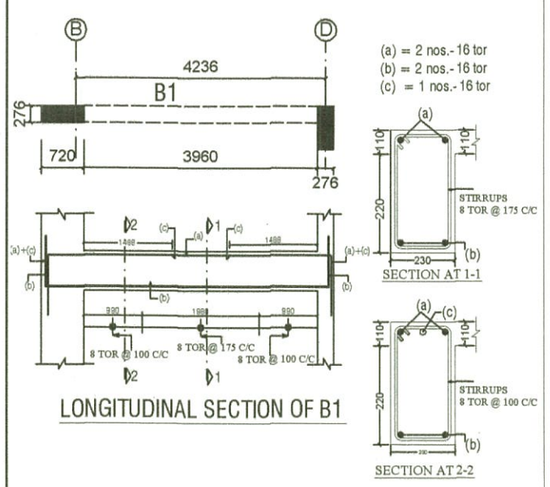

LONGITUDINAL SECTION OF B1

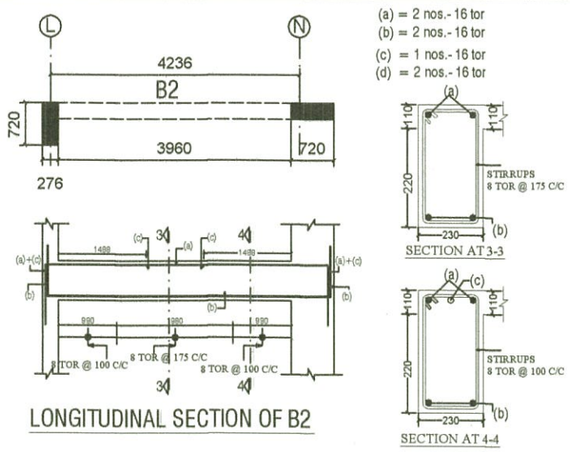

LONGITUDINAL SECTION OF B2

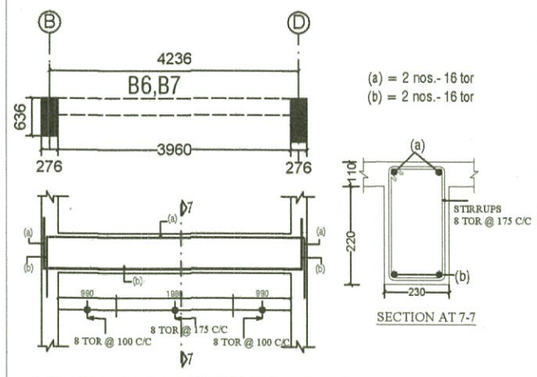

LONGITUDINAL SECTION OF B6,B7

PANAL	BAR MARK	BAR DIA.	SPACING	DESCRIPTION
Ⓐ (SLAB THICKNESS 110)	1	8 Φ	175C/C	BOTTOM MAIN
	2	8 Φ	175C/C	BOTTOM DIST.
Ⓑ (SLAB THICKNESS 110)	3	8 Φ	200C/C	BOTTOM MAIN
	4	8 Φ	200C/C	BOTTOM DIST.
Ⓒ (SLAB THICKNESS 110)	5	8 Φ	175C/C	BOTTOM MAIN
	6	8 Φ	200C/C	BOTTOM DIST.
Ⓓ (SLAB THICKNESS 110)	7	8 Φ	200C/C	BOTTOM MAIN
	8	8 Φ	200C/C	BOTTOM DIST.
Ⓔ (SLAB THICKNESS 110)	9	8 Φ	200C/C	BOTTOM MAIN
	10	8 Φ	200C/C	BOTTOM DIST.
Ⓕ (SLAB THICKNESS 110)	11	8 Φ	175C/C	BOTTOM MAIN
	12	8 Φ	175C/C	BOTTOM DIST.
Ⓖ (SLAB THICKNESS 110)	13	8 Φ	150C/C	BOTTOM MAIN
	14	8 Φ	175C/C	BOTTOM DIST.
Ⓗ (SLAB THICKNESS 110)	15	8 Φ	200C/C	BOTTOM MAIN
	16	8 Φ	200C/C	BOTTOM DIST.
staircase (SLAB THICKNESS 110)	17	12Φ	125C/C	BOTTOM MAIN
	18	8 Φ	150C/C	BOTTOM DIST.

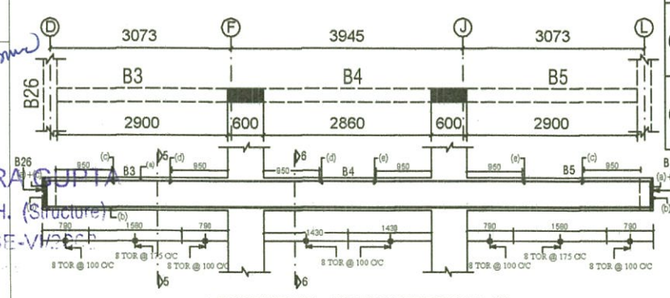

LONGITUDINAL SECTION OF B3,B4 & B5

PROJECT

TYPE - 3 RESIDENCE P.W.D. DEHRADUN

TITLE

REINF. DETAIL. OF ROOF SLAB & BEAMS.

DRAWN	DATE	DRG. NO.	REV. NO.
MANISHA	19.09. 2012	TYPE- 3- STR.- 8	1

CONSULTANT :

SUNEET PRASAD
STRUCTURAL &
CONSULTING ENGINEER

Suneet Prasad
SUNEET PRASAD
B. E., M. E. (CIVIL), MIV, FIV
AUTHORIZED STRUCTURAL ENGINEER
20, PHASE-I, ENGINEERS ENCLAVE
G.M.S. ROAD, DEHRADUN-248 001
REG.No: DoH-UK/ASE-III/2008

Checked and approved
Gupta

SUBHASH CHANDRA GUPTA
B.E. Civil (Hon's), M. TECH. (Structure)
Reg. No. DOH-UK/ASE-VI/C-5
University of Petroleum

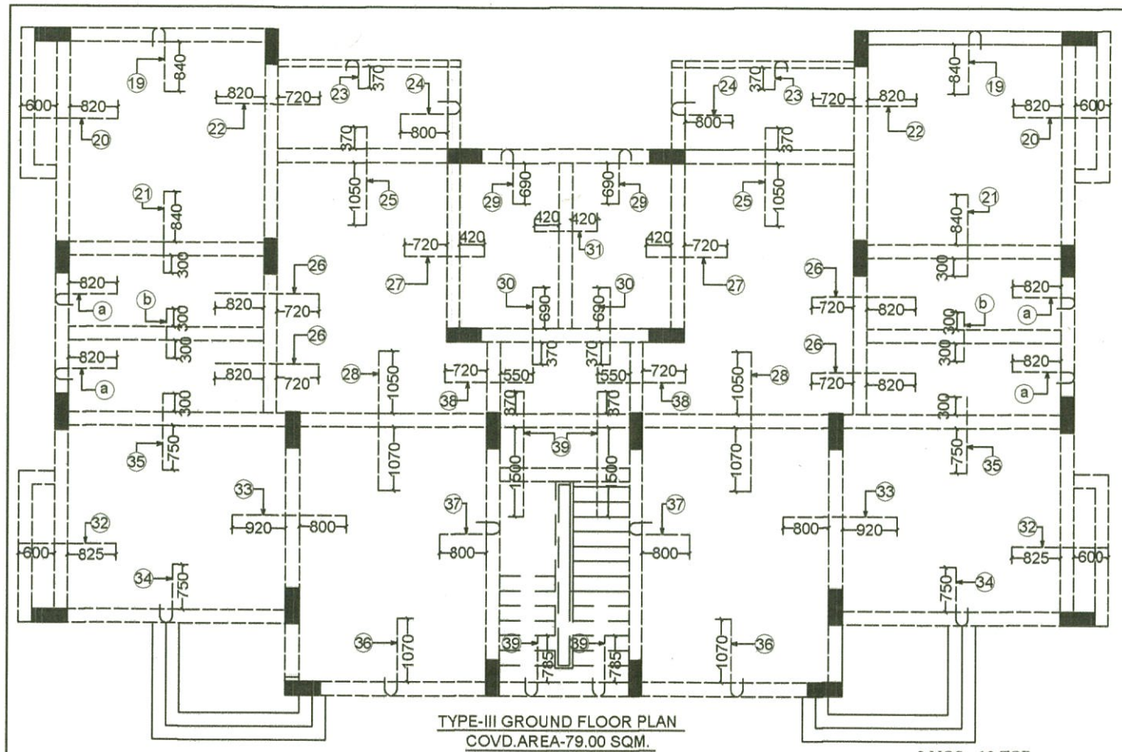

TYPE-III GROUND FLOOR PLAN
COVD.AREA-79.00 SQM.

TOP DIST. 8 TOR @ 200 C/C WHERE EVER REQUIRED.

ALL LINTEL BEAMS TO HAVE BBEARING OF 230 ON EITHER SIDE OPEING

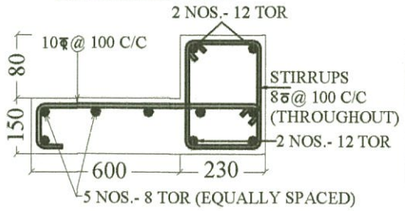

TYPICAL BEAM/ SUNSHADE DETAIL

BAR MARK	BAR DIA.	SPACING	DESCRIPTION
19	8 Φ	400C/C	TOP MAIN
20	8 Φ	400C/C	TOP MAIN
21	8 Φ	400C/C	TOP MAIN
22	8 Φ	350C/C	TOP MAIN
23	8 Φ	300C/C	TOP MAIN
24	8 Φ	400C/C	TOP MAIN
25	8 Φ	400C/C	TOP MAIN
26	8 Φ	300C/C	TOP MAIN
27	8 Φ	350C/C	TOP MAIN
28	8 Φ	300C/C	TOP MAIN
29	8 Φ	300C/C	TOP MAIN
30	8 Φ	300C/C	TOP MAIN
31	8 Φ	350C/C	TOP MAIN
32	8 Φ	300C/C	TOP MAIN
33	8 Φ	350C/C	TOP MAIN
34	8 Φ	130C/C	TOP MAIN
35	8 Φ	350C/C	TOP MAIN
36	8 Φ	300C/C	TOP MAIN
37	8 Φ	350C/C	TOP MAIN
38	8 Φ	130C/C	TOP MAIN
39	12Φ	125C/C	TOP MAIN

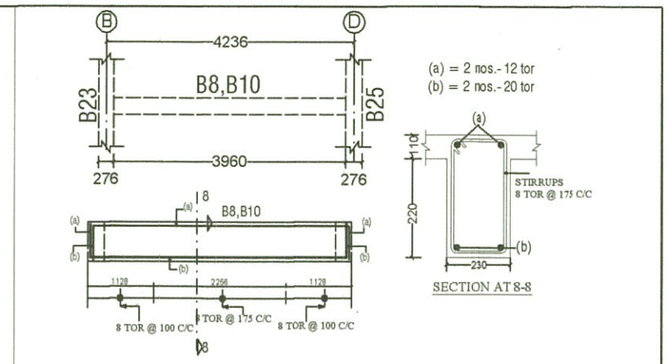

LONGITUDINAL SECTION OF B8,B10

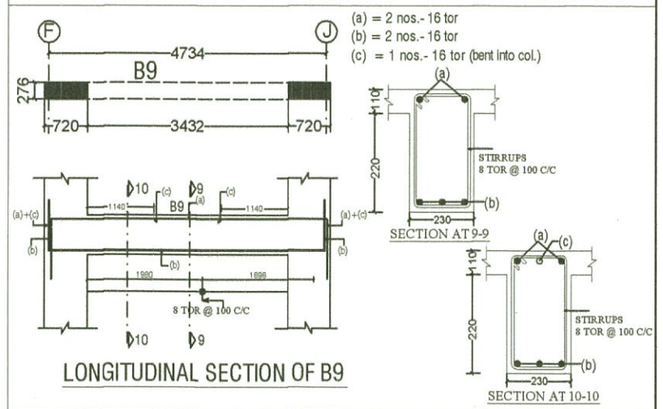

LONGITUDINAL SECTION OF B9

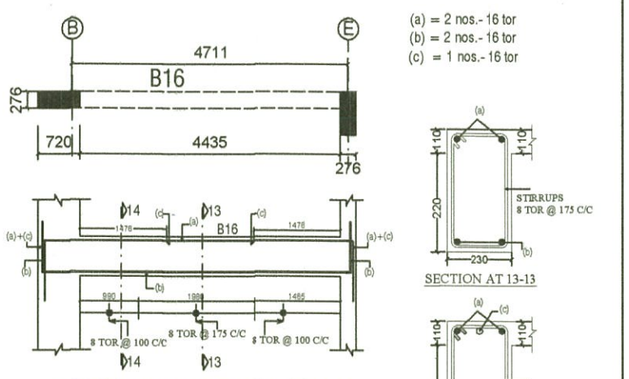

LONGITUDINAL SECTION OF B16

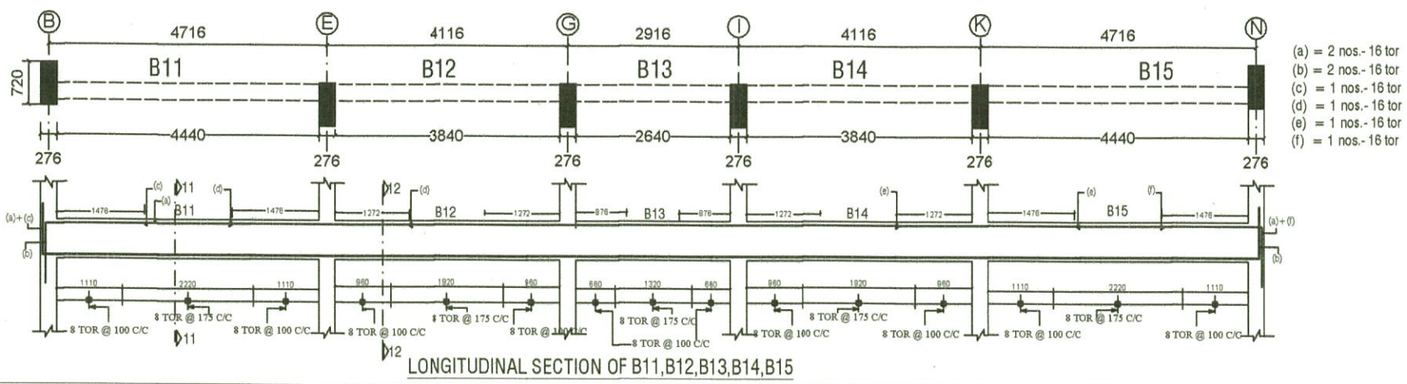

LONGITUDINAL SECTION OF B11,B12,B13,B14,B15

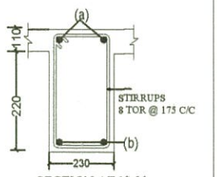

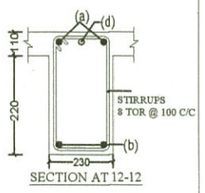

PROJECT

TYPE - 3 RESIDENCE P.W.D. DEHRADUN

TITLE

REINF. DETAIL. OF ROOF SLAB & BEAMS.

DRAWN	DATE	DRG. NO.	REV. NO.
MANISHA	19.09. 2012	TYPE- 3- STR.- 9	1

CONSULTANT :

SUNEET PRASAD
STRUCTURAL & CONSULTING ENGINEER

Suneet Prasad

SUNEET PRASAD
B. E., M. E. (CIVIL), M I V, F I V
AUTHORIZED STRUCTURAL ENGINEER
20, PHASE-I, ENGINEERS ENCLAVE
G.M.S. ROAD, DEHRADUN-248 001
REG. No: DoH - UK / ASE - III / 2008

Checked and approve

Gupta

SUBHASH CHANDRA GUPTA
B.E. Civil (Hon's), M. TECH. (Structure)
Reg. No. DOH-UK/
University of

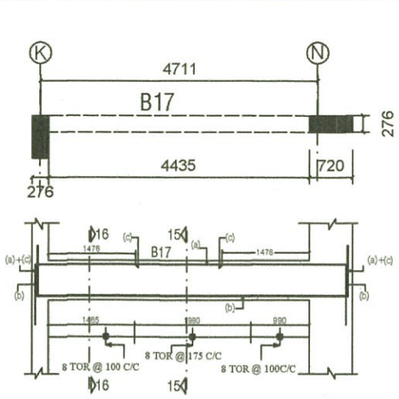

LONGITUDINAL SECTION OF B17

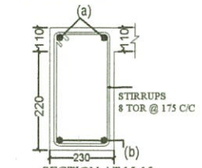

SECTION AT 15-15

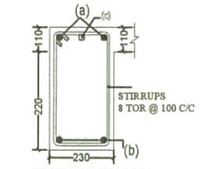

SECTION AT 16-16

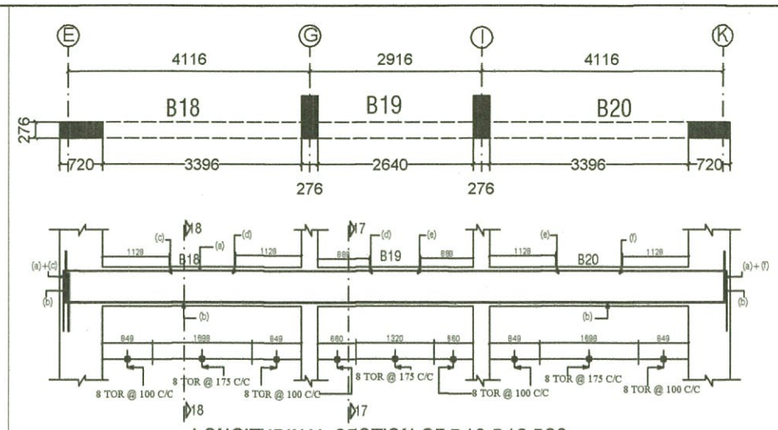

LONGITUDINAL SECTION OF B18,B19,B20

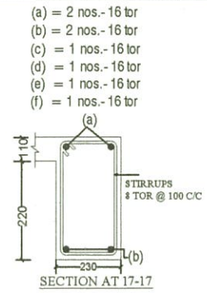

SECTION AT 17-17

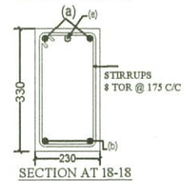

SECTION AT 18-18

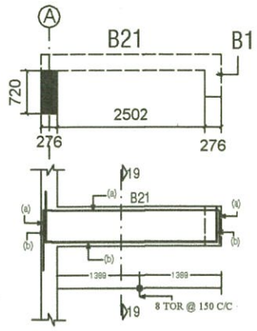

LONGITUDINAL SECTION OF B21

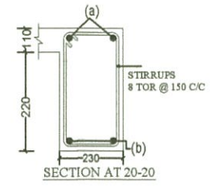

SECTION AT 20-20

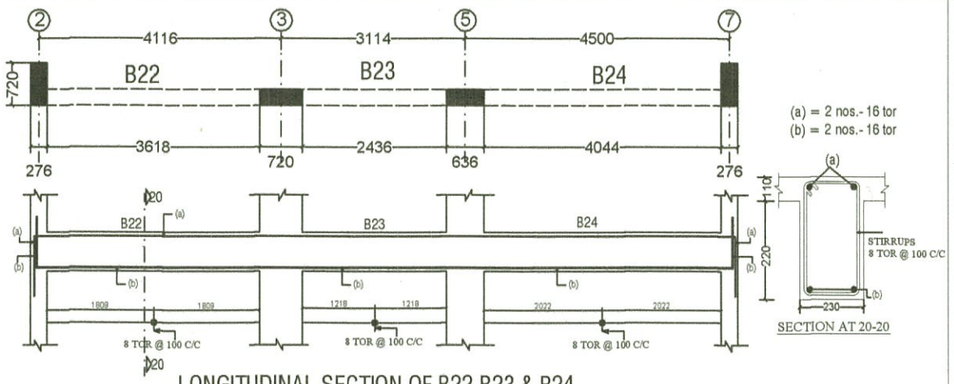

LONGITUDINAL SECTION OF B22,B23 & B24

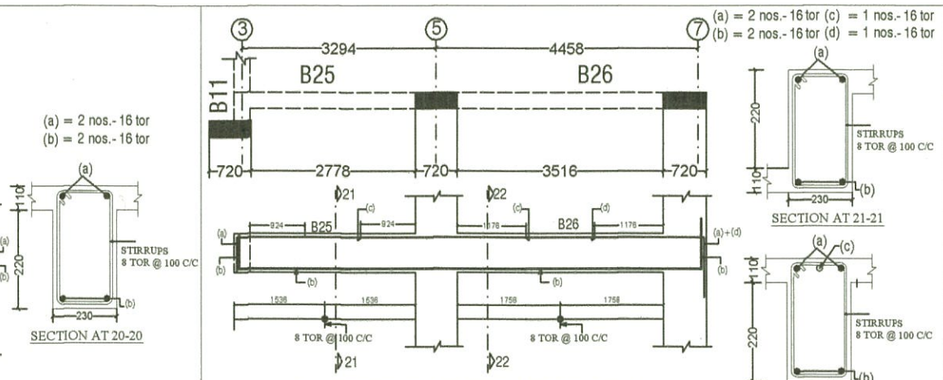

LONGITUDINAL SECTION OF B25 & B26

SECTION AT 21-21

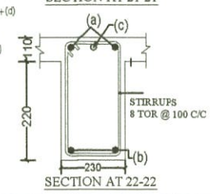

SECTION AT 22-22

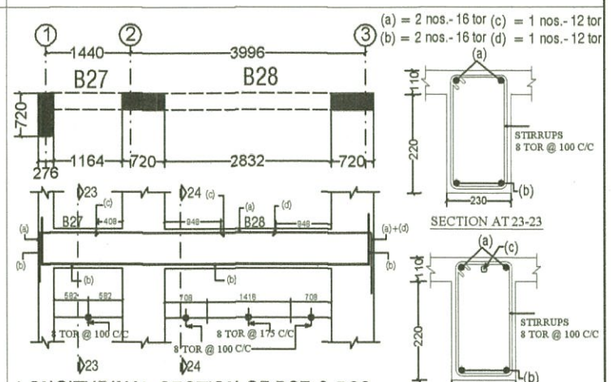

LONGITUDINAL SECTION OF B27 & B28

SECTION AT 23-23

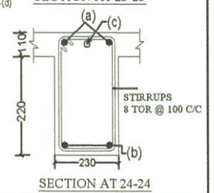

SECTION AT 24-24

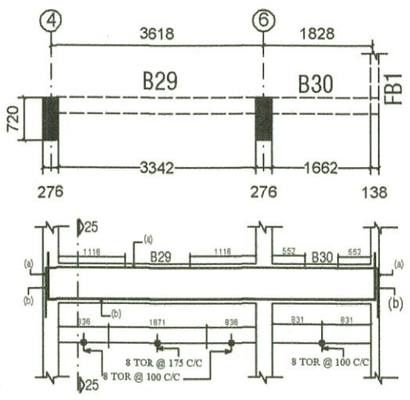

LONGITUDINAL SECTION OF B29 & B30

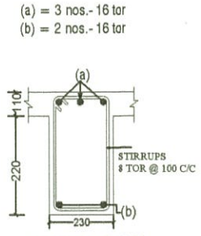

SECTION AT 25-25

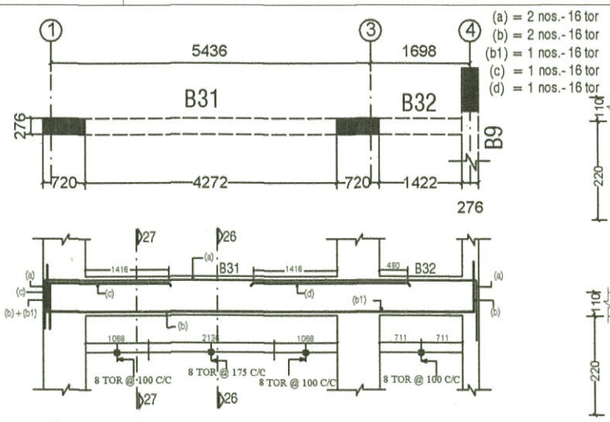

LONGITUDINAL SECTION OF B31 & B32

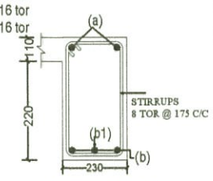

SECTION AT 26-26

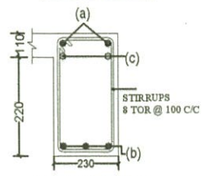

SECTION AT 27-27

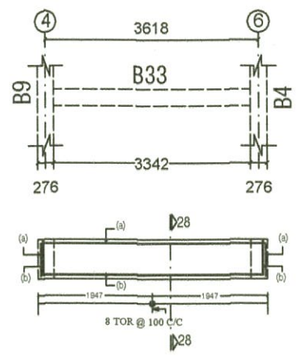

LONGITUDINAL SECTION OF B33

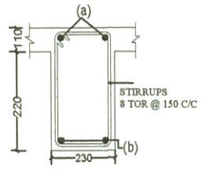

SECTION AT 28-28

PROJECT

TYPE - 3 RESIDENCE P.W.D. DEHRADUN

TITLE

REINF. DETAIL. OF ROOF SLAB & BEAMS.

DRAWN	DATE	DRG. NO.	REV. NO.
MANISHA	19.09. 2012	TYPE- 3- STR.- 10	1

CONSULTANT :

SUNEET PRASAD
STRUCTURAL & CONSULTING ENGINEER

SUNEET PRASAD
B. E., M. E. (CIVIL), M I V, F I V
AUTHORIZED STRUCTURAL ENGINEER
20, PHASE-I, ENGINEERS ENCLAVE
G.M.S ROAD, DEHRADUN-248 001
REG. No: DoH - UK / ASE - III / 2008

Checked and approve

SUBHASH CHANDRA GUPTA
B.E. Civil (Hon's), M. TECH. (Structure)
Reg. No. DOH-UK/ASE-VI/2008
University of Petrolium & Energy Stu.

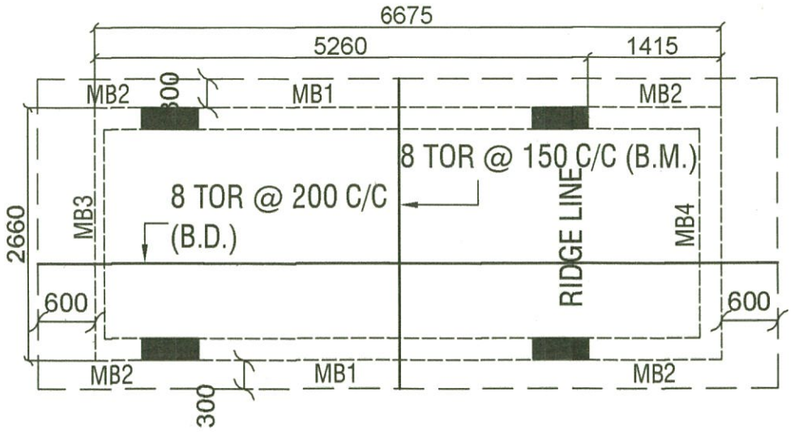

REINF. DETAIL OF MUMTY SLAB (WITH BOTTOM BARS)
(110 THICK SLAB)

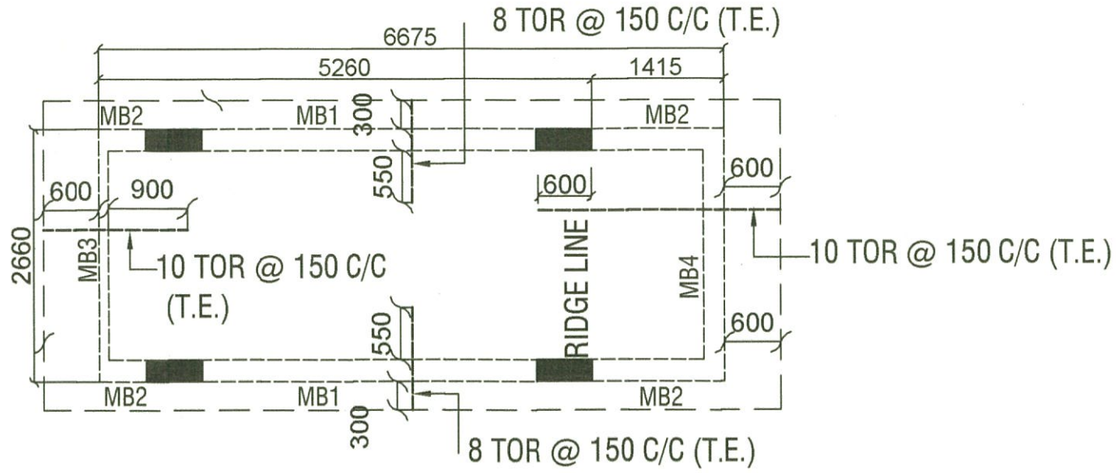

REINF. DETAIL OF MUMTY SLAB (WITH TOP BARS) (110 TH. SLAB)
TOP DISST. 8 TOR @ 200 C/C (WHEREVER REQUIRED)

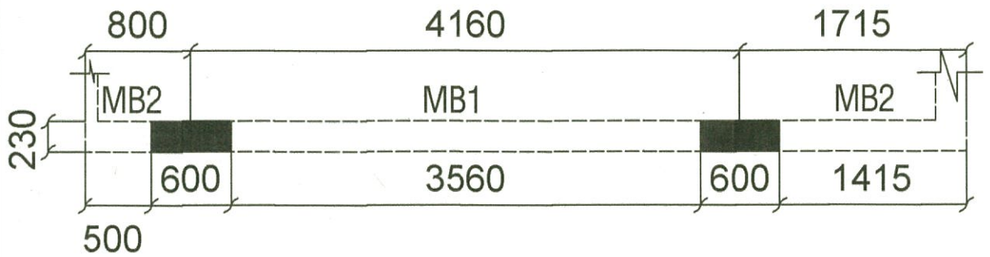

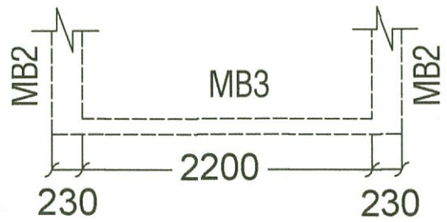

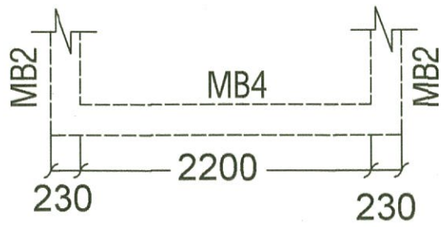

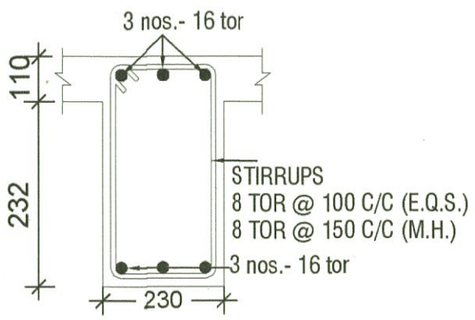

MB1

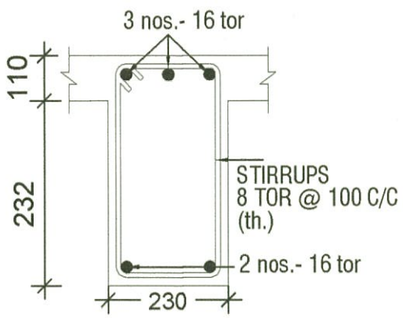

MB2

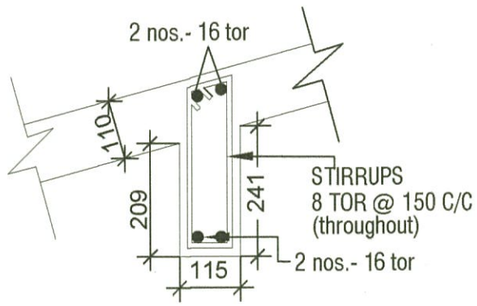

MB3

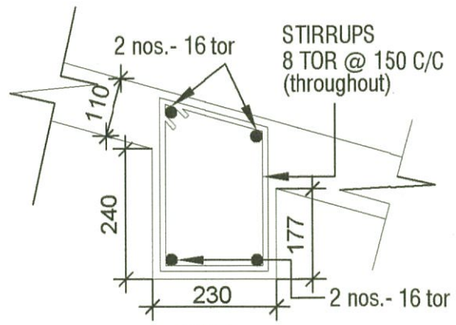

MB4

PROJECT

TYPE - 3 RESIDENCE P.W.D. DEHRADUN

TITLE

REINF. DETAIL. OF ROOF SLAB & BEAMS.

DRAWN	DATE	DRG. NO.	REV. NO.
MANISHA	19.09. 2012	TYPE- 3- STR.- 11	1

CONSULTANT :

SUNEET PRASAD
STRUCTURAL & CONSULTING ENGINEER

Suneet Prasad.
SUNEET PRASAD
B. E., M. E. (CIVIL), M I V, F I V
AUTHORIZED STRUCTURAL ENGINEER
20, PHASE-I, ENGINEERS ENCLAVE
G.M.S. ROAD, DEHRADUN-248 001
REG. No: DoH - UK / ASE - III / 2008

Checked and approved
Gupta
SUBHASH CHANDRA GUPTA
B.E. Civil (Hon's), M. TECH. (Structure)
Reg. No. DOH-UK/ASE-VI/2008
University of Petrolium & Energy Stud

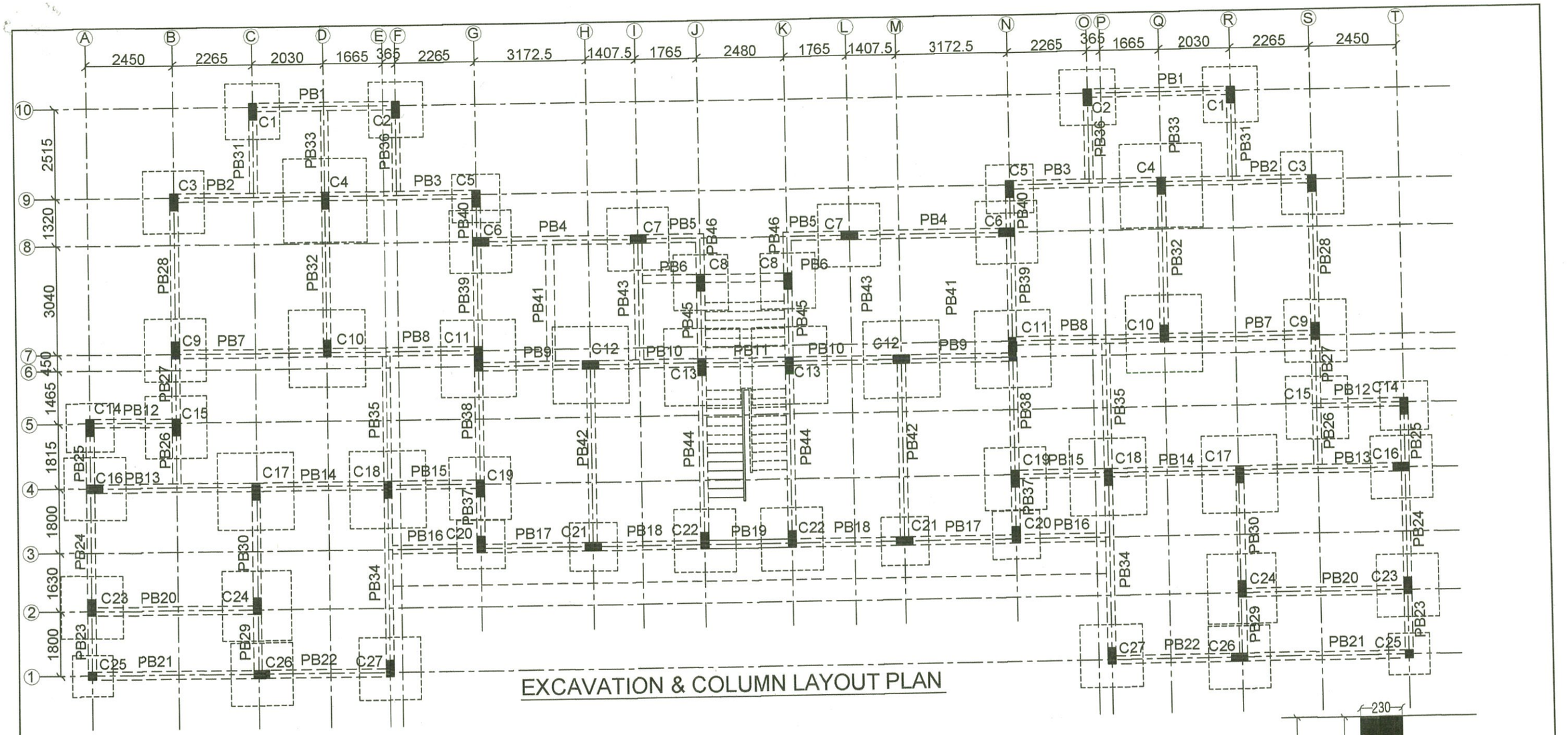

EXCAVATION & COLUMN LAYOUT PLAN

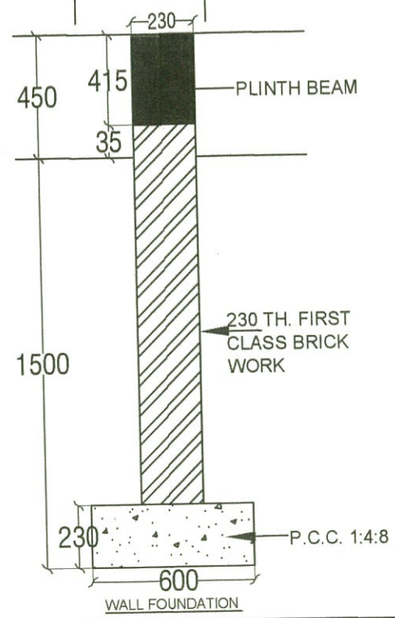

WALL FOUNDATION

PROJECT

TYPE - 4 RESIDENCE P.W.D. DEHRADUN (SUPER)

TITLE

EXCAVATION & COLUMN LAYOUT PLAN & COLUMN DETAILS.

DRAWN	DATE	DRG. NO.	REV. NO.
MANISHA	12.11. 2012	TYPE- 4- STR.- 1	1

CONSULTANT :

SUNEET PRASAD
STRUCTURAL & CONSULTING ENGINEER

Suneet Prasad
SUNEET PRASAD
B. E., M. E. (CIVIL), M I V, F I V
AUTHORIZED STRUCTURAL ENGINEER
20, PHASE-I, ENGINEERS ENCLAVE
G.M.S. ROAD, DEHRADUN-248 001
REG. No: DoH - UK / ASE - III / 2008

Checked and approve
Gupta

SUBHASH CHANDRA GUPTA
B.E. Civil (Hon's), M. TECH. (Structure)
Reg. No. DOH-UK/ASE-VI/2008
University of Petrolium & Energy Studies

COLS.	EXCAVATION SIZE	FOUNDATION SIZE IN (INCHES)							REINF. IN FOOTING		COLUMN REINF.
		L	B	D	l_1	b_1	a	b	nL	nB	
C1,C2	1550 X 1550	1400	1400	300	585	470	230	460	10 NOS.-10 ϕ	10 NOS.-10 ϕ	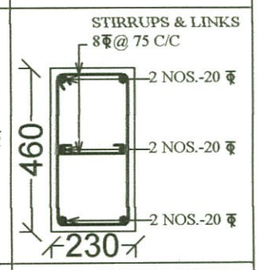
C3,C15, C23,C27	1750 X 1750	1600	1600	300	685	570	230	460	12 NOS.-10 ϕ	12 NOS.-10 ϕ	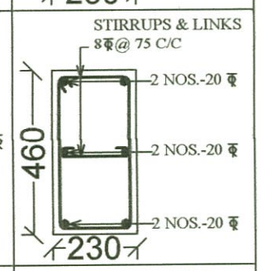
C4	2350 X 2350	2200	2200	380	985	870	230	460	17 NOS.-12 ϕ	17 NOS.-12 ϕ	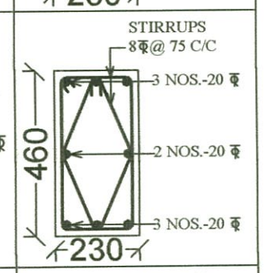
C5,C14	1350 X 1350	1200	1200	300	485	370	230	460	9 NOS.-10 ϕ	9 NOS.-10 ϕ	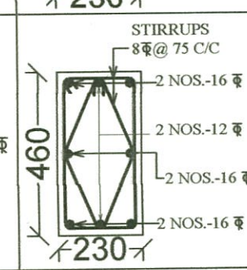
C6,C7	1750 X 1750	1600	1600	300	685	570	230	460	12 NOS.-10 ϕ	12 NOS.-10 ϕ	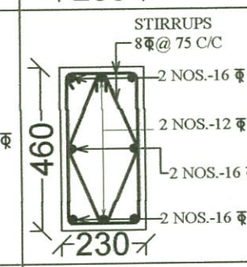
C8	1550 X 1550	1400	1400	300	585	470	230	460	10 NOS.-10 ϕ	10 NOS.-10 ϕ	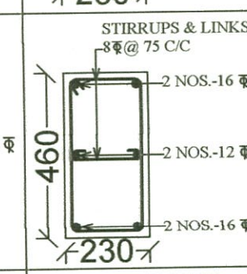
C9,C16	1750 X 1750	1600	1600	300	685	570	230	460	12 NOS.-10 ϕ	12 NOS.-10 ϕ	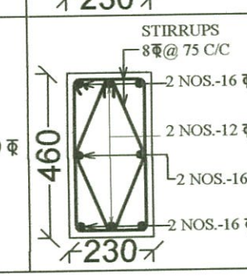

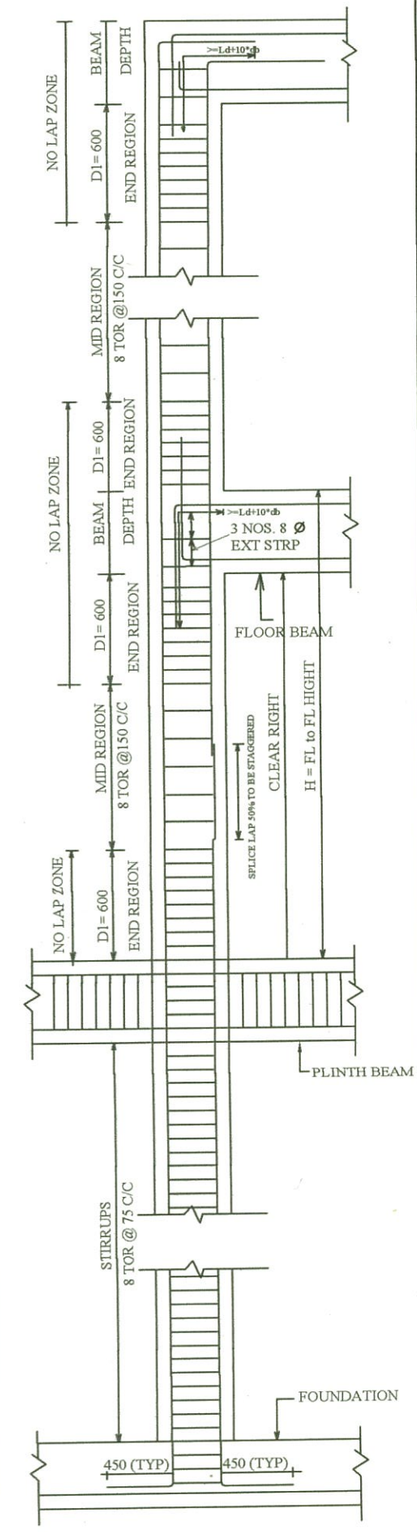

COLUMN (L) TIE AND SPLICE DETAIL

STIRRUPS END REGION 8ϕ @ 75 C/C
MID REGION 8ϕ @ 150 C/C

d_b = DIA OF BAR

12ϕ	16ϕ	20ϕ	25ϕ	28 ϕ
550	750	950	1150	1300

DEVELOPMENT LENGTH = Ld + 10 * d_b

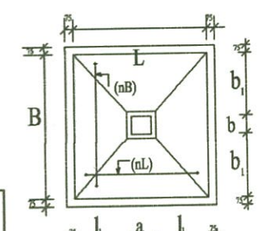

TYP. PLAN OF FOOTING

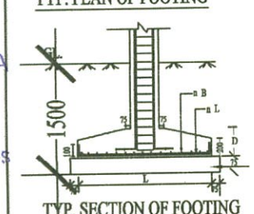

TYP. SECTION OF FOOTING

PROJECT
TYPE - 4 RESIDENCE P.W.D. DEHRADUN (SUPER)

TITLE
EXCAVATION & COLUMN LAYOUT PLAN & COLUMN DETAILS.

DRAWN	DATE	DRG. NO.	REV. NO.
MANISHA	12.11. 2012	TYPE- 4- STR.- 2	1

CONSULTANT :
SUNEET PRASAD
STRUCTURAL & CONSULTING ENGINEER

Suneet Prasad
SUNEET PRASAD
B. E., M. E. (CIVIL), M I V, F I V
AUTHORIZED STRUCTURAL ENGINEER
20, PHASE-I, ENGINEERS ENCLAVE
G.M.S. ROAD, DEHRADUN-248 001
REG. No: DoH - UK / ASE - III / 2008

Checked and approve
Gupta
SUBHASH CHANDRA GUPTA
B.E. Civil (H ons), M. TECH. (Structure)
Reg. No. DCH-UK/ASE-VI/2008
University of Petrolium & Energy Studies

COLS.	EXCAVATION SIZE	FOUNDATION SIZE IN (INCHES)							REINF. IN FOOTING		COLUMN REINF.
		L	B	D	l_1	b_1	a	b	nL	nB	
C10	2150 X 2150	2000	2000	380	885	770	230	460	13 NOS.-12 ϕ	13 NOS.-12 ϕ	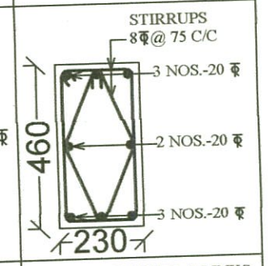
C11	2150 X 2150	2000	2000	380	885	660	230	680	13 NOS.-12 ϕ	13 NOS.-12 ϕ	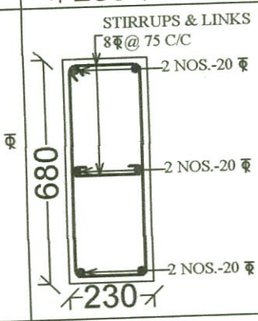
C12,C13, C17	2150 X 2150	2000	2000	380	885	770	230	460	13 NOS.-12 ϕ	13 NOS.-12 ϕ	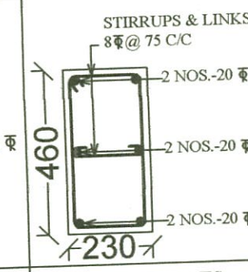
C18	2150 X 2150	2000	2000	380	885	770	230	460	13 NOS.-12 ϕ	13 NOS.-12 ϕ	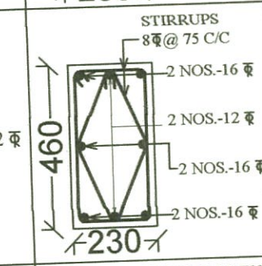
C19	1750 X 1750	1600	1600	300	685	570	230	460	12 NOS.-10 ϕ	12 NOS.-10 ϕ	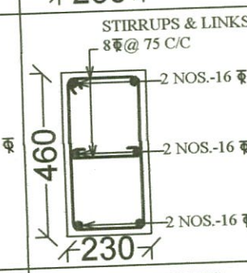
C20,C21	1350 X 1350	1200	1200	300	485	370	230	460	9 NOS.-10 ϕ	9 NOS.-10 ϕ	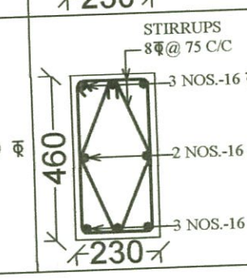

PROJECT
TYPE - 4 RESIDENCE P.W.D. DEHRADUN (SUPER)

TITLE
EXCAVATION & COLUMN LAYOUT PLAN & COLUMN DETAILS.

DRAWN	DATE	DRG. NO.	REV. NO.
MANISHA	12.11. 2012	TYPE- 4- STR.- 3	1

CONSULTANT :
SUNEET PRASAD
STRUCTURAL & CONSULTING ENGINEER

Suneet Prasad
SUNEET PRASAD
B. E., M. E. (CIVIL), M I V, F I V
AUTHORIZED STRUCTURAL ENGINEER
20, PHASE-I, ENGINEERS ENCLAVE
G.M.S. ROAD, DEHRADUN-248 001
REG. No: DoH - UK / ASE - III / 2008

Checked and approve
Gupta
SUBHASH CHANDRA GUPTA
B.E. Civil (H ons), M. TECH. (Structure)
Reg. No. DOH-UK/ASE-VI/2008
University of Petrolium & Energy Studies

COLS.	EXCAVATION SIZE	FOUNDATION SIZE IN (INCHES)							REINF. IN FOOTING		COLUMN REINF.
		L	B	D	l_1	b_1	a	b	nL	nB	
C22	1750 X 1750	1600	1600	300	685	570	230	460	12 NOS.-10 ϕ	12 NOS.-10 ϕ	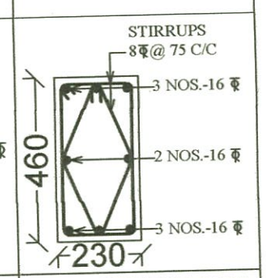
C24	1950 X 1950	1800	1800	300	785	670	230	460	12 NOS.-12 ϕ	12 NOS.-12 ϕ	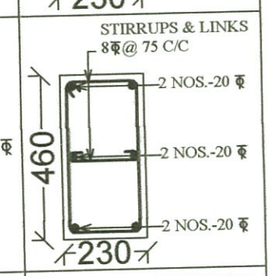
C25	1150 X 1150	1000	1000	300	385	385	230	230	8 NOS.-10 ϕ	8 NOS.-10 ϕ	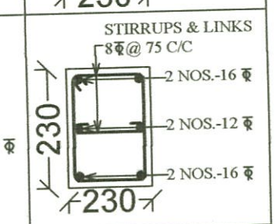
C26	1750 X 1750	1600	1600	300	685	570	230	460	12 NOS.-10 ϕ	12 NOS.-10 ϕ	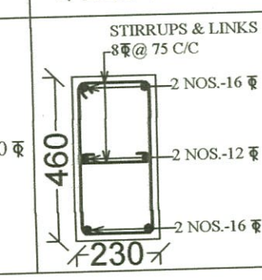

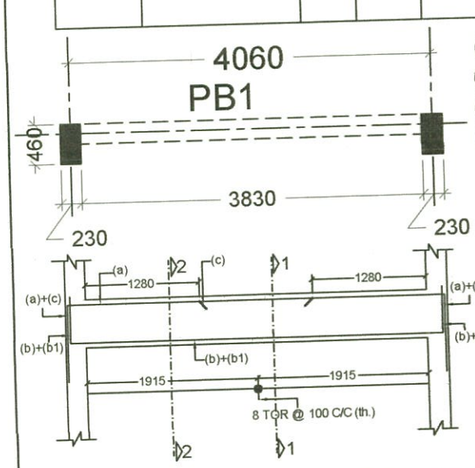

(a) = 2 nos.- 16 tor
(b) = 2 nos.- 16 tor
(b1) = 1 nos.- 12 tor
(c) = 1 nos.- 16 tor
(bent into col.)

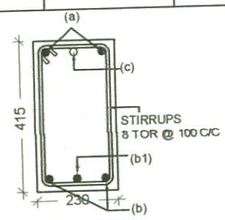

SECTION AT 2-2

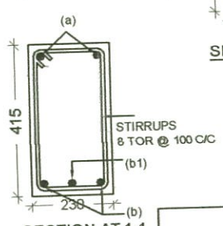

SECTION AT 1-1

LONGITUDINAL SECTION OF PB1

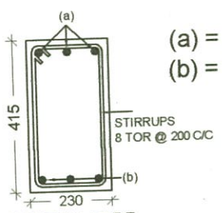

SECTION AT 7-7

(a) = 3 nos.- 12 tor
(b) = 3 nos.- 12 tor

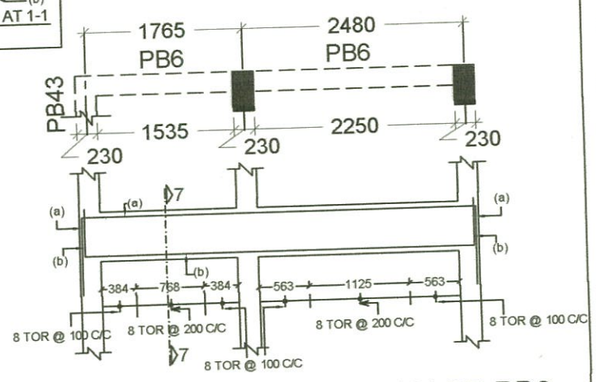

LONGITUDINAL SECTION OF PB6

NOTES

1. READ THIS DRAWING IN CONJUCTION WITH RELEVANT ARCH. DRAWING.
2. ALL DIMENSIONS IN MM.
3. M20 GRADE CONCRETE SHALL BE USED UNLESS NOTED OTHERWISE.
4. REINFORCEMENT BAR TO BE USED SHALL BE HIGH YIELD STRENGTH DEFORMED BAR STRESS 415N/mm^2
5. ANY LAP OF BAR SHALL NOT BE LESS THAN 50xDIA OF LARGER DIA.
6. CLEAR COVER TO MAIN REINF.SHALL BE AS FOLLOWS

FOOTINGS	-	50MM.
WALL	-	25MM.
COLUMN	-	40MM.
BEAM	-	25MM.
SLAB	-	20MM.

7. ALL STEEL SHOULD BE FREE OF RUST, SCALE ,GREASE, DIRT, OIL, ETC.
8. ALL CONCRETE TO BE MECHANICALLY MIXED AND VIBRATED
9. ALL CONCRETE TO BE PLACED AGAINST STEEL OR WATER ROOF PLY. PUCCA SHUTTERING
10. NET ALLOWABLE BEARING CAPACITY OF SOIL IS TAKEN AS 10.00 TONS / SQM. AT 1.50 M. DEPTH BELOW GROUND LEVEL.
11. BUILDING IS DESIGNED FOR GROUND +1 FLOORS.
12. BUILDING IS DESIGN FOR E.Q. ZONE IV.

PROJECT
TYPE - 4 RESIDENCE P.W.D. DEHRADUN (SUPER)

TITLE
EXCAVATION & COLUMN LAYOUT PLAN & COLUMN DETAILS.

DRAWN	DATE	DRG. NO.	REV. NO.
MANISHA	12.11. 2012	TYPE- 4- STR.- 4	1

CONSULTANT :
SUNEET PRASAD
STRUCTURAL & CONSULTING ENGINEER

Suneet Prasad
SUNEET PRASAD
B. E., M. E. (CIVIL), M I V,
AUTHORIZED STRUCTURAL ENGINEER
20, PHASE-I, ENGINEERS ENCLAVE
G.M.S. ROAD, DEHRADUN-248 001
REG. No: DoH - UK / ASE - III / 2008

Checked and approve
Gupta
SUBHASH CHANDRA GUPTA
B.E. Civil (Hon's), M. TECH. (Structure)
Reg. No. DOH-UK/ASE-VI/2008
University of Petrolium & Energy Studies

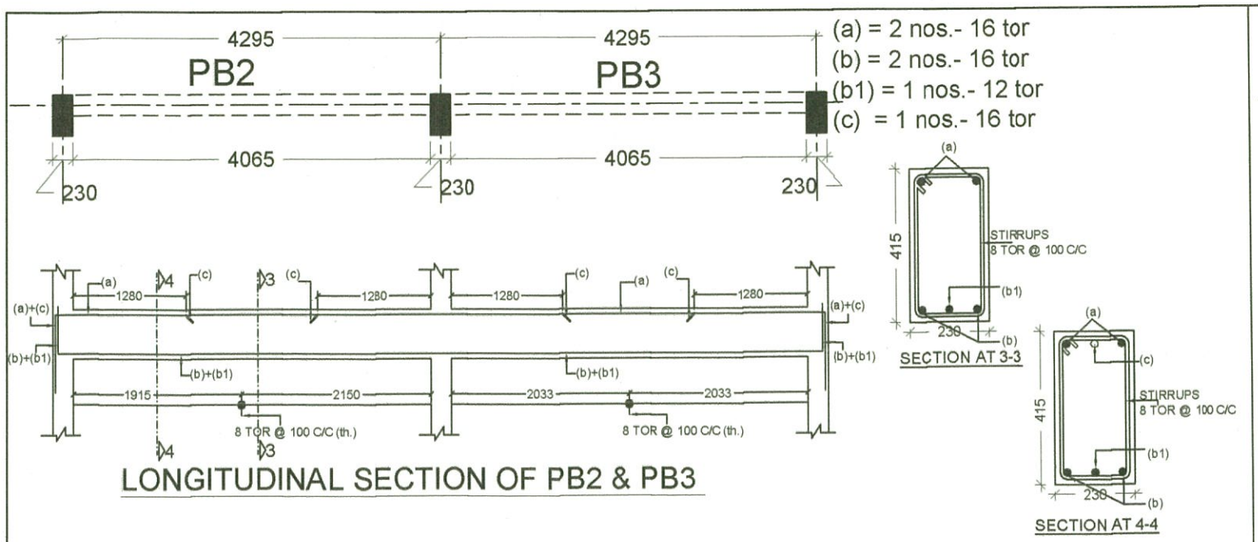

LONGITUDINAL SECTION OF PB2 & PB3

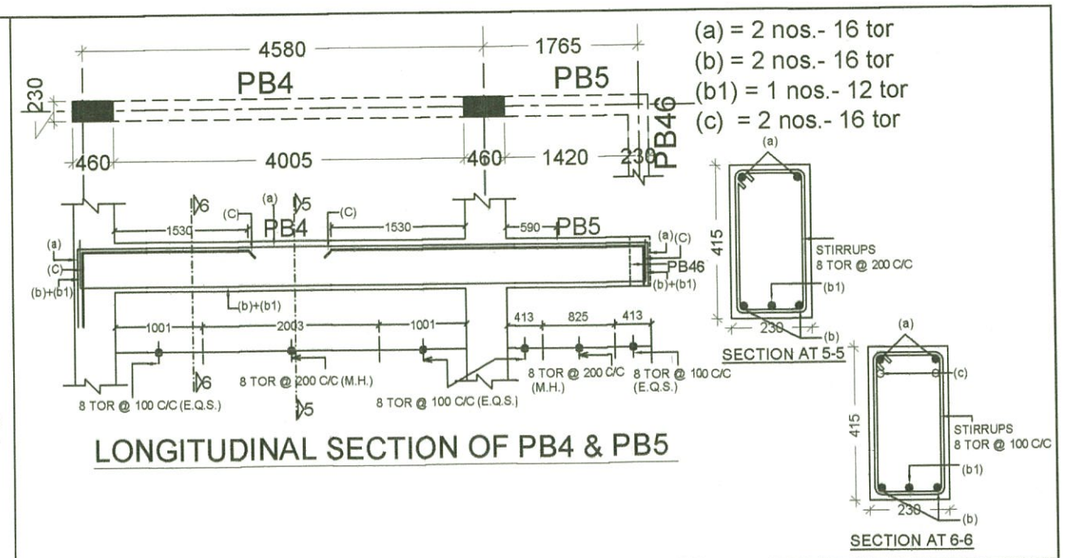

LONGITUDINAL SECTION OF PB4 & PB5

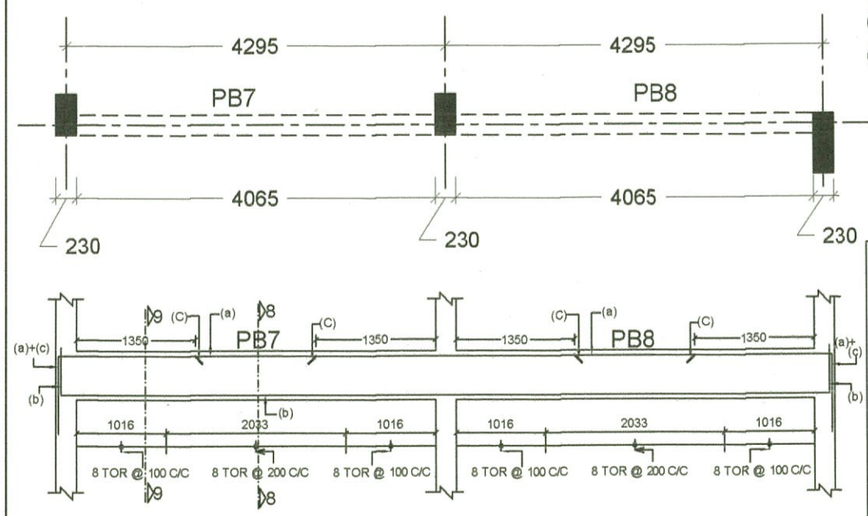

LONGITUDINAL SECTION OF PB7 & PB8

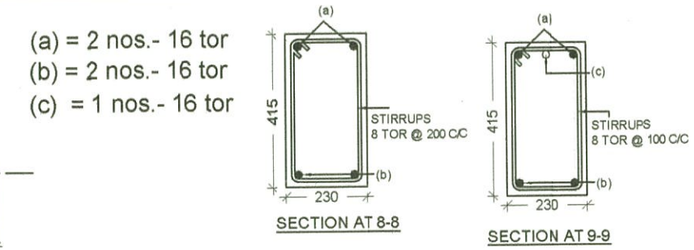

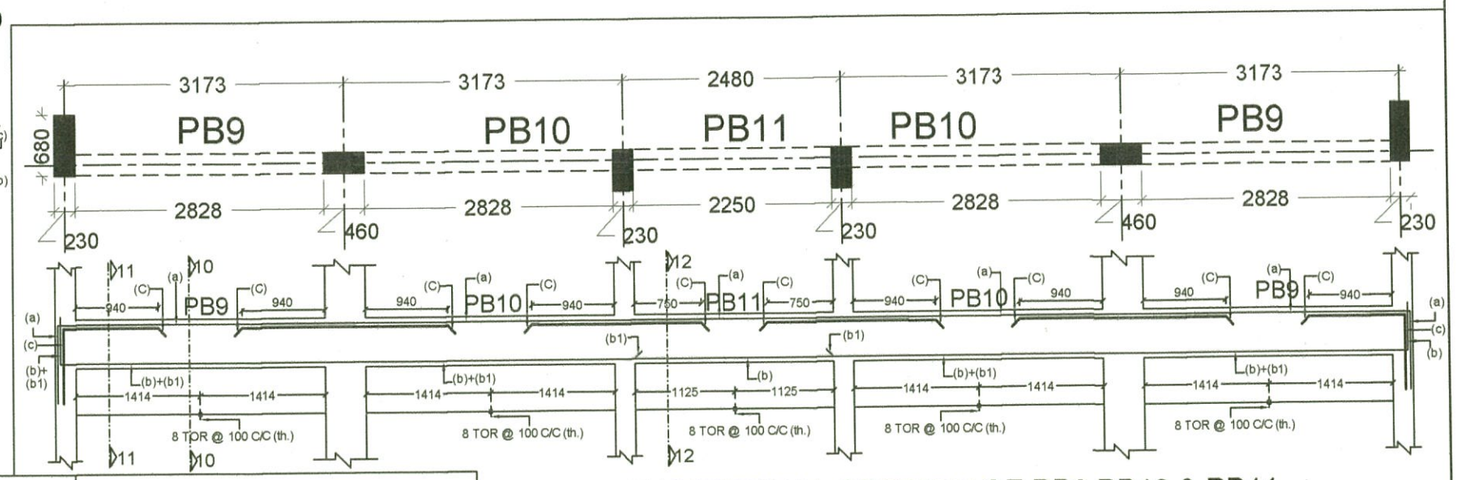

LONGITUDINAL SECTION OF PB9,PB10 & PB11

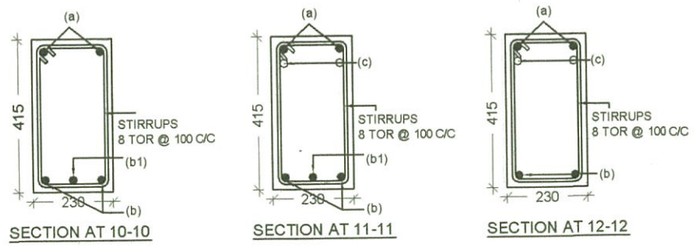

PROJECT			
TYPE - 4 RESIDENCE P.W.D. DEHRADUN (SUPER)			
TITLE			
REINF. DETAIL OF PLINTH BEAMS.			
DRAWN MANISHA	DATE 12.11. 2012	DRG. NO. TYPE- 4- STR.- 5	REV. NO. 1

CONSULTANT :

SUNEET PRASAD
STRUCTURAL & CONSULTING ENGINEER

Suneet Prasad
SUNEET PRASAD
B. E., M. E. (CIVIL), M I V, F I V
AUTHORIZED STRUCTURAL ENGINEER
20, PHASE-I, ENGINEERS ENCLAVE
G.M.S. ROAD, DEHRADUN-248 001
REG. No: DoH - UK / ASE - III / 2008

Checked and approve
Gupta

SUBHASH CHANDRA GUPTA
B.E. Civil (Hon's), M. TECH. (Structure)
Reg. No. DOH-UK/ASE-VI/2008
University of Petrolium & Energy Studies

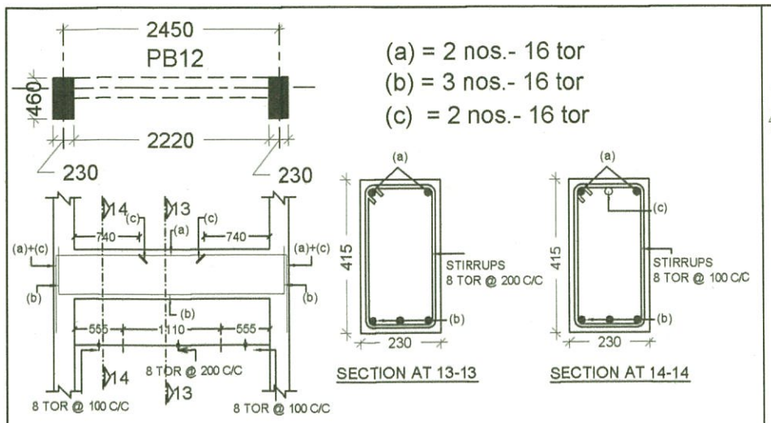

LONGITUDINAL SECTION OF PB12

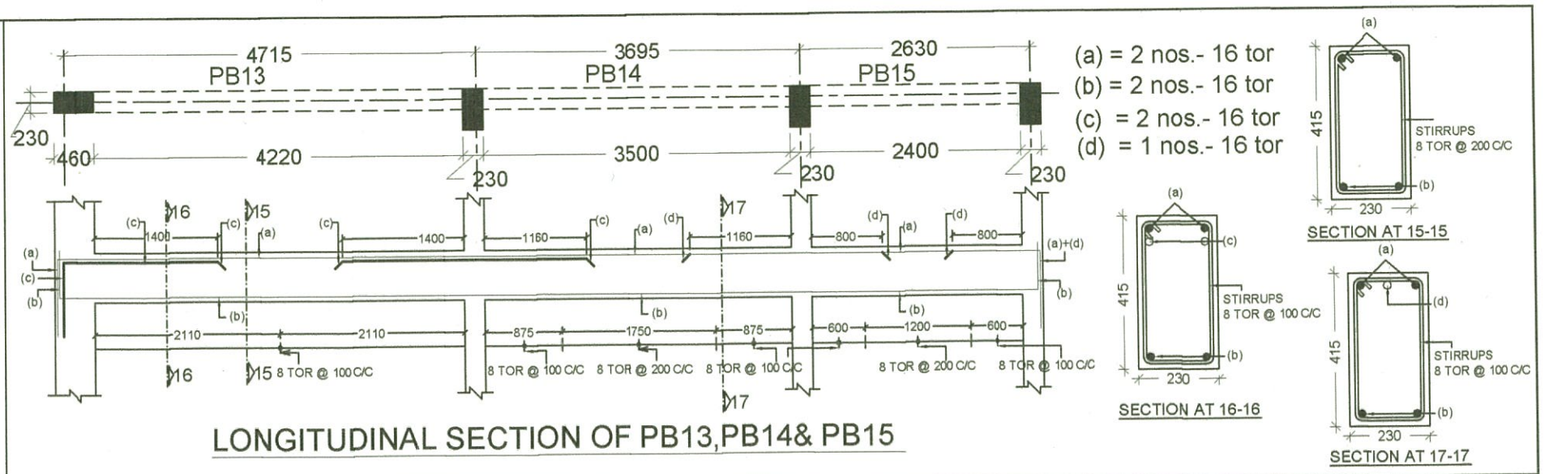

LONGITUDINAL SECTION OF PB13,PB14& PB15

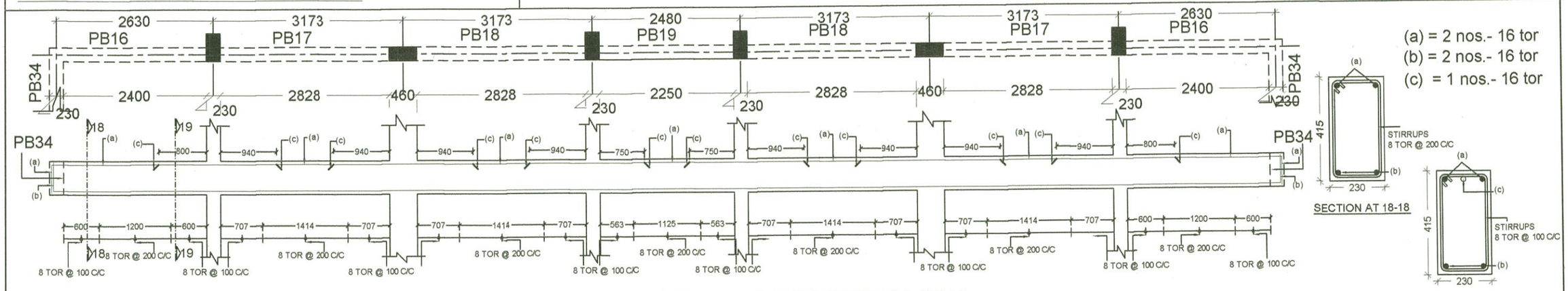

LONGITUDINAL SECTION OF PB16,PB17,PB18& PB19

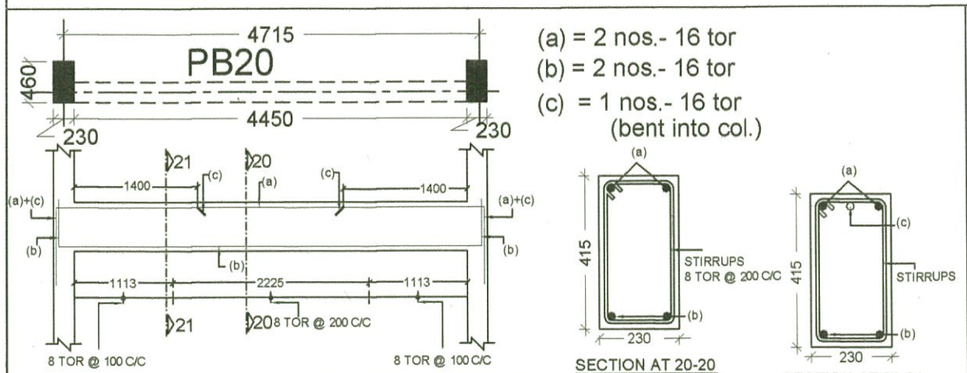

LONGITUDINAL SECTION OF PB20

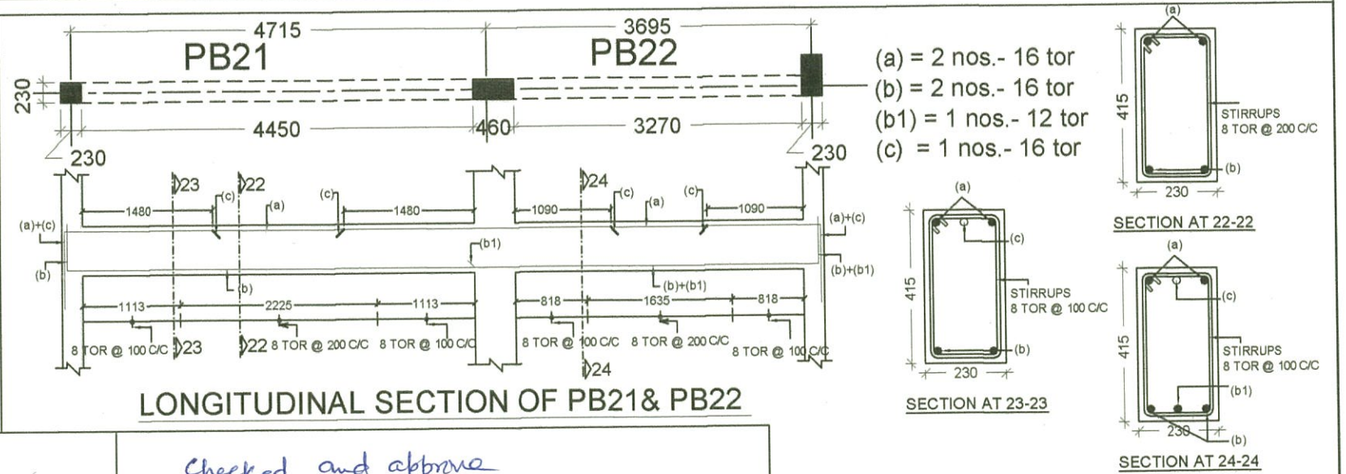

LONGITUDINAL SECTION OF PB21& PB22

PROJECT

TYPE - 4 RESIDENCE P.W.D. DEHRADUN (SUPER)

TITLE

REINF. DETAIL OF PLINTH BEAMS.

DRAWN	DATE	DRG. NO.	REV. NO.
MANISHA	12.11. 2012	TYPE- 4- STR.- 6	1

CONSULTANT :

SUNEET PRASAD
STRUCTURAL & CONSULTING ENGINEER

Suneet Prasad

SUNEET PRASAD
B. E., M. E. (CIVIL), M I V, F I V
AUTHORIZED STRUCTURAL ENGINEER
20, PHASE-I, ENGINEERS ENCLAVE
G.M.S. ROAD, DEHRADUN-248 001
REG. No: DoH - UK / ASE - III / 2008

Checked and approve

Gupta

SUBHASH CHANDRA GUPTA
B.E. Civil (Hon's), M. TECH. (Structure)
Reg. No. DOH-UK/ASE-VI/2008
University of Petrolium & Energy Studies

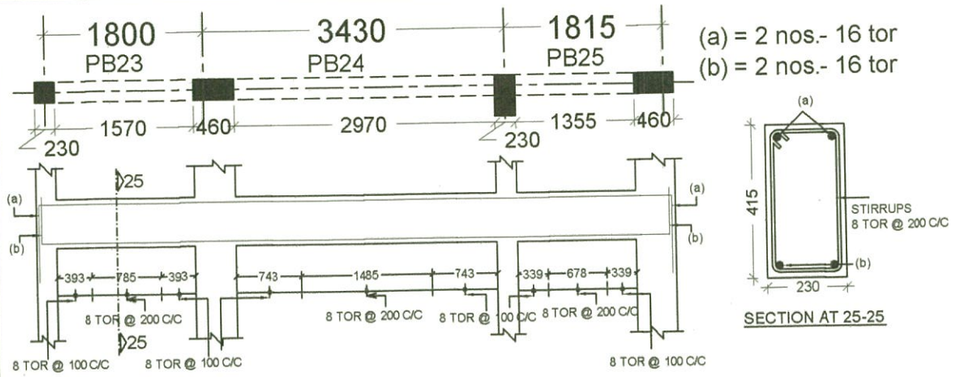

LONGITUDINAL SECTION OF PB23,PB24& PB25

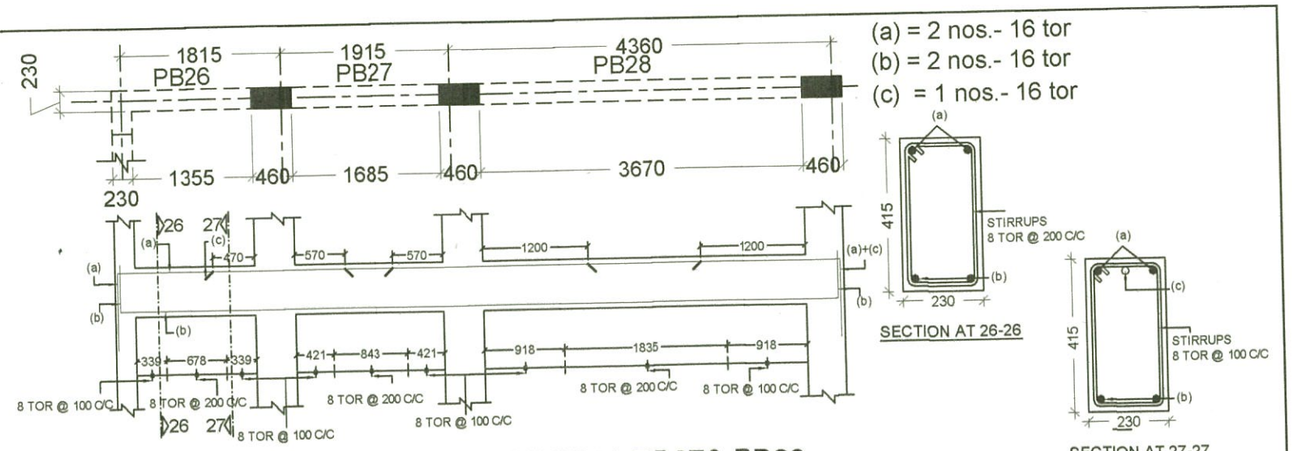

LONGITUDINAL SECTION OF PB26,PB27& PB28

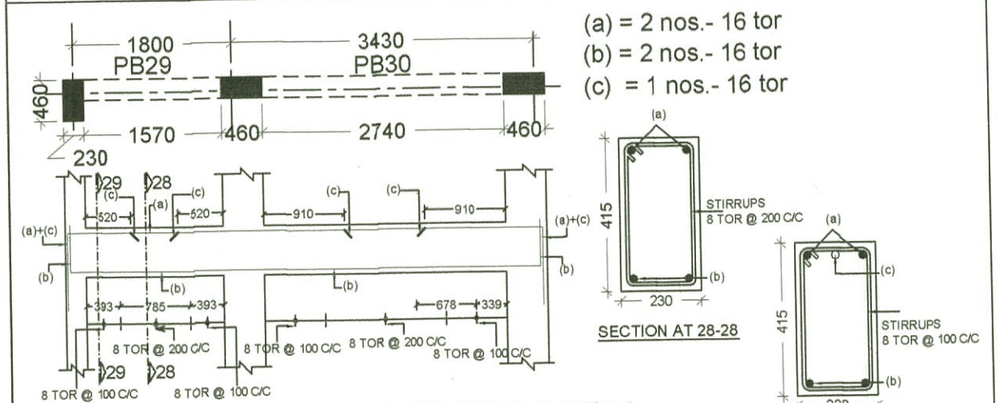

LONGITUDINAL SECTION OF PB29 & PB30

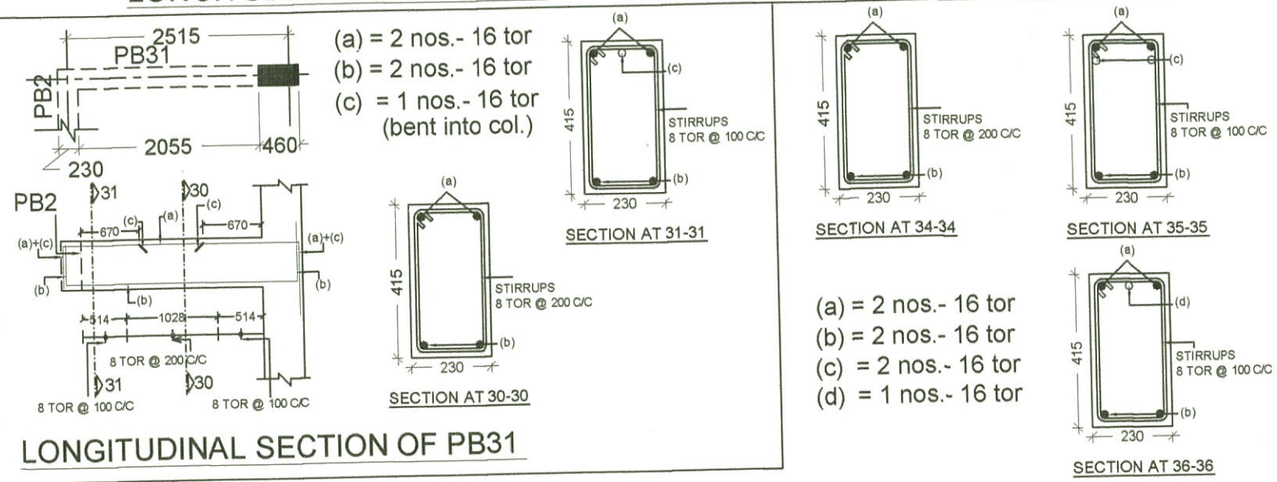

LONGITUDINAL SECTION OF PB31

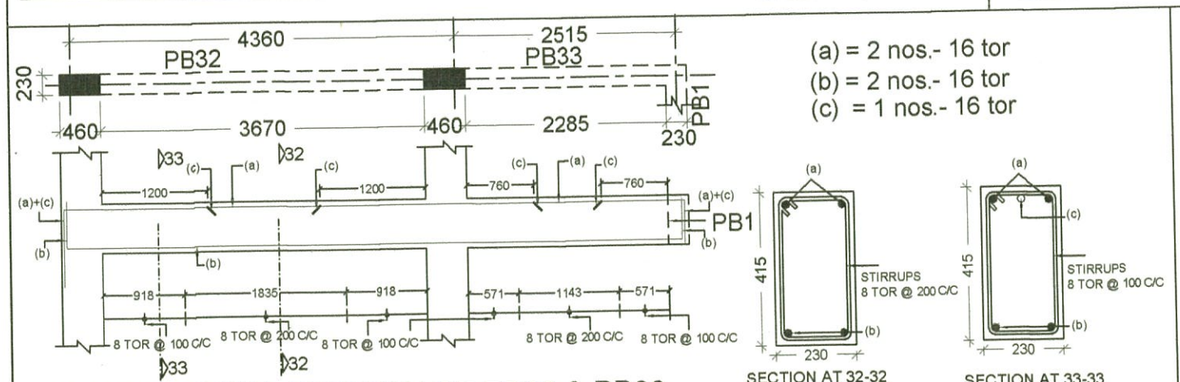

LONGITUDINAL SECTION OF PB32 & PB33

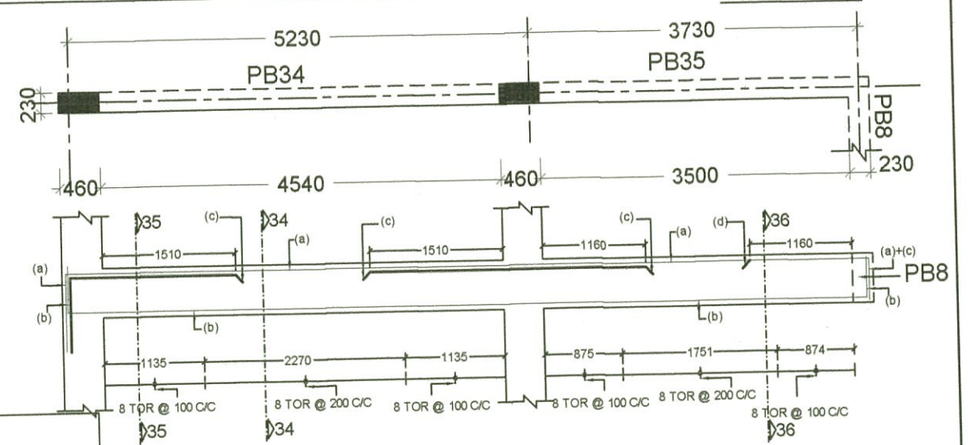

LONGITUDINAL SECTION OF PB34 & PB35

PROJECT

TYPE - 4 RESIDENCE P.W.D. DEHRADUN (SUPER)

TITLE

REINF. DETAIL OF PLINTH BEAMS.

DRAWN	DATE	DRG. NO.	REV. NO.
MANISHA	12.11. 2012	TYPE- 4- STR.- 7	1

CONSULTANT :

SUNEET PRASAD
STRUCTURAL & CONSULTING ENGINEER

Suneet Prasad
SUNEET PRASAD
B. E., M. E. (CIVIL), M I V, F I V
AUTHORIZED STRUCTURAL ENGINEER
20, PHASE-I, ENGINEERS ENCLAVE
G.M.S. ROAD, DEHRADUN-248 001
REG. No: DoH - UK / ASE - III / 2008

Checked and approve
Gupta

SUBHASH CHANDRA GUPTA
B.E. Civil (Hon's), M. TECH. (Structure)
Reg. No. DOH-UK/ASE-VI/2008
University of Petrolium & Energy Studies

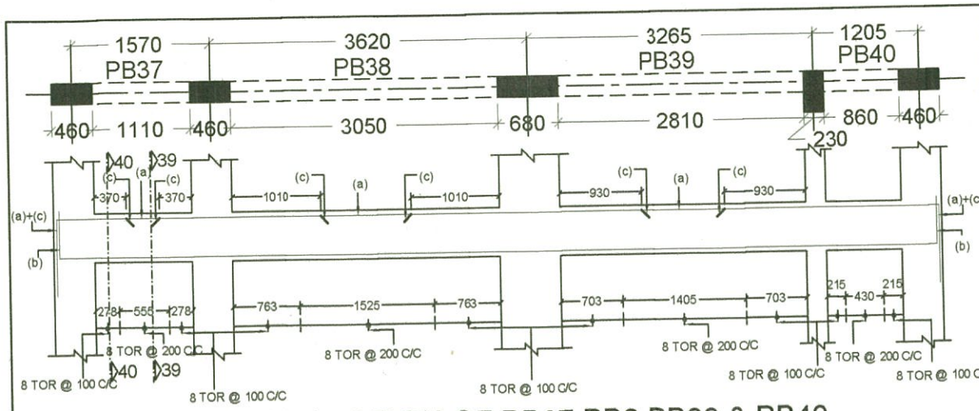

(a) = 2 nos.- 16 tor
(b) = 2 nos.- 16 tor
(c) = 2 nos.- 16 tor

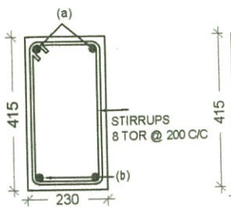

SECTION AT 39-39

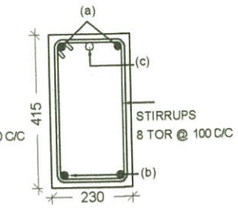

SECTION AT 40-40

LONGITUDINAL SECTION OF PB37,PB8,PB39 & PB40

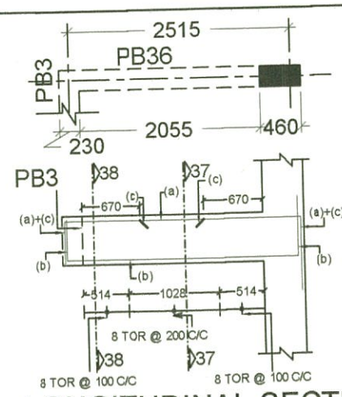

(a) = 2 nos.- 16 tor
(b) = 2 nos.- 16 tor
(c) = 1 nos.- 16 tor
(bent into col.)

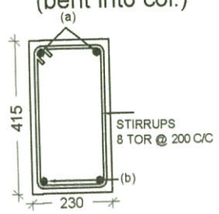

SECTION AT 37-37

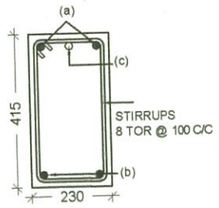

SECTION AT 38-38

LONGITUDINAL SECTION OF PB36

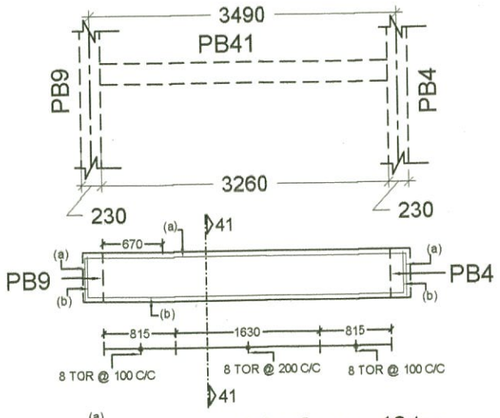

(a) = 2 nos.- 12 tor
(b) = 2 nos.- 16 tor

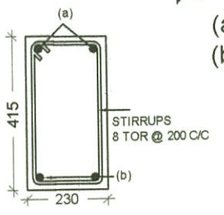

SECTION AT 41-41

LONGITUDINAL SECTION OF PB41

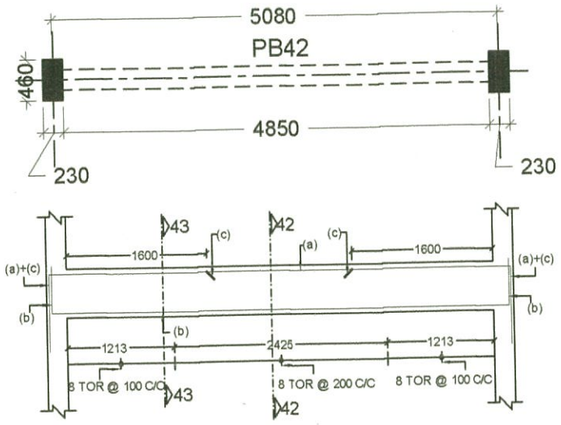

(a) = 2 nos.- 16 tor
(b) = 2 nos.- 16 tor
(c) = 1nos.- 16 tor

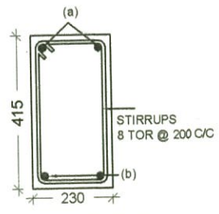

SECTION AT 42-42

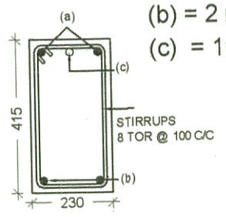

SECTION AT 43-43

LONGITUDINAL SECTION OF PB42

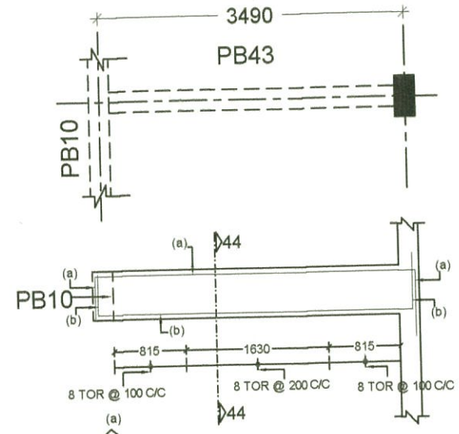

(a) = 2 nos.- 16 tor
(b) = 2 nos.- 16 tor

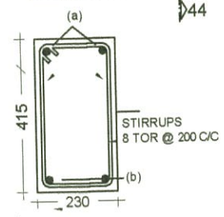

SECTION AT 44-44

LONGITUDINAL SECTION OF PB43

(a) = 2 nos.- 16 tor
(b) = 2 nos.- 16 tor
(c) = 1nos.- 16 tor

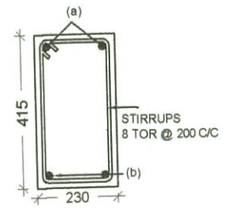

SECTION AT 45-45

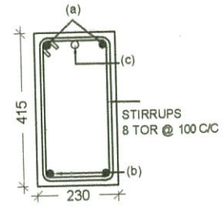

SECTION AT 46-46

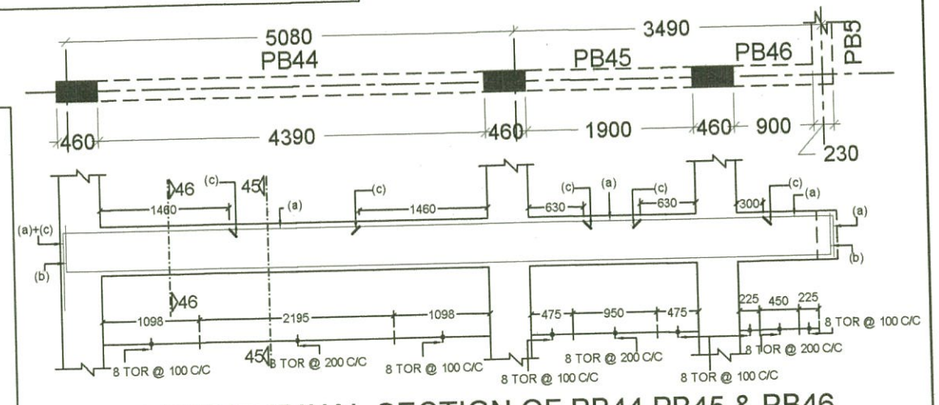

LONGITUDINAL SECTION OF PB44,PB45 & PB46

PROJECT
TYPE - 4 RESIDENCE P.W.D. DEHRADUN (SUPER)

TITLE
REINF. DETAIL OF PLINTH BEAMS.

DRAWN	DATE	DRG. NO.	REV. NO.
MANISHA	12.11. 2012	TYPE- 4- STR.- 8	1

CONSULTANT :
SUNEET PRASAD
STRUCTURAL & CONSULTING ENGINEER

Suneet Prasad
SUNEET PRASAD
B. E., M. E. (CIVIL), M I V, F I V
AUTHORIZED STRUCTURAL ENGINEER
20, PHASE-I, ENGINEERS ENCLAVE
G.M.S. ROAD, DEHRADUN-248 001
REG. No: DoH - UK / ASE - III / 2008

Checked and approve
Gupta
SUBHASH CHANDRA GUPTA
B.E. Civil (Hon's), M. TECH. (Structure)
Reg. No. DOH-UK/ASE-VI/2008
University of Petrolium & Energy Studies

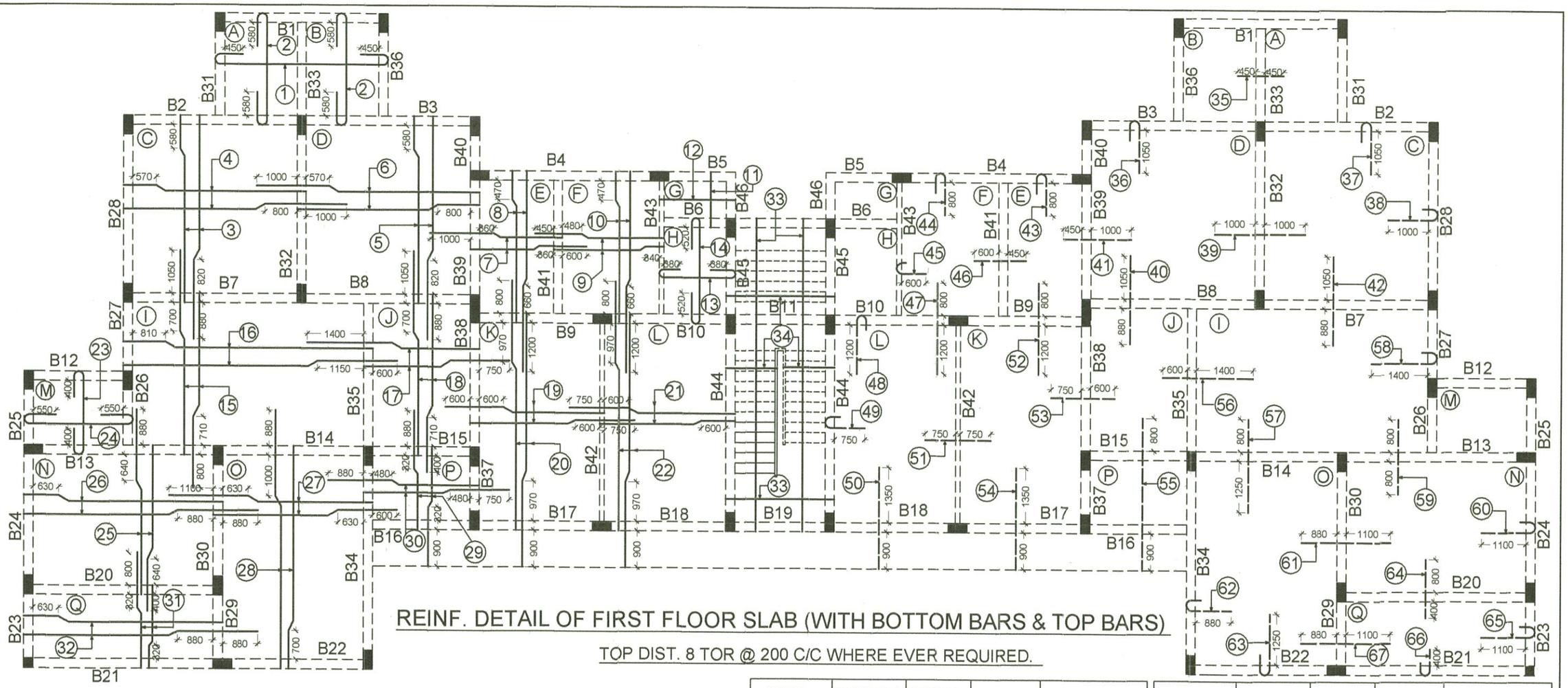

REINF. DETAIL OF FIRST FLOOR SLAB (WITH BOTTOM BARS & TOP BARS)

TOP DIST. 8 TOR @ 200 C/C WHERE EVER REQUIRED.

ALL LINTEL BEAMS TO HAVE BBEARING OF 230 ON EITHER SIDE OPEING

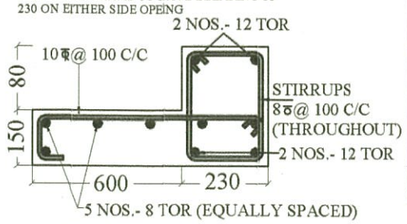

TYPICAL BEAM/ SUNSHADE DETAIL

PANEL	BAR MARK	BAR DIA.	SPACING	DESCRIPTION
Q (SLAB THICKNESS 115)	31	8 ϕ	200C/C	BOTTOM MAIN
	32	8 ϕ	200C/C	BOTTOM DIST.
STAIRCASE (SLAB THICKNESS 115)	33	12ϕ	100C/C	BOTTOM MAIN
	34	8ϕ	150C/C	BOTTOM DIST.

PANEL	BAR MARK	BAR DIA.	SPACING	DESCRIPTION
A (SLAB THICKNESS 115)	1	8 ϕ	175C/C	BOTTOM MAIN
	2	8 ϕ	200C/C	BOTTOM DIST.
B (SLAB THICKNESS 115)	1	8 ϕ	175C/C	BOTTOM MAIN
	2	8 ϕ	200C/C	BOTTOM DIST.
C (SLAB THICKNESS 115)	3	8 ϕ	125C/C	BOTTOM MAIN
	4	8 ϕ	125C/C	BOTTOM DIST.
D (SLAB THICKNESS 115)	5	8 ϕ	125C/C	BOTTOM MAIN
	6	8 ϕ	125C/C	BOTTOM DIST.
E (SLAB THICKNESS 115)	7	8 ϕ	175C/C	BOTTOM MAIN
	8	8 ϕ	200C/C	BOTTOM DIST.
F (SLAB THICKNESS 115)	9	8 ϕ	175C/C	BOTTOM MAIN
	10	8 ϕ	200C/C	BOTTOM DIST.
G (SLAB THICKNESS 115)	11	8 ϕ	200C/C	BOTTOM MAIN
	12	8 ϕ	200C/C	BOTTOM DIST.
H (SLAB THICKNESS 115)	13	8 ϕ	175C/C	BOTTOM MAIN
	14	8 ϕ	200C/C	BOTTOM DIST.

PANEL	BAR MARK	BAR DIA.	SPACING	DESCRIPTION
I (SLAB THICKNESS 115)	15	8 ϕ	125C/C	BOTTOM MAIN
	16	8 ϕ	175C/C	BOTTOM DIST.
J (SLAB THICKNESS 115)	17	8 ϕ	175C/C	BOTTOM MAIN
	18	8 ϕ	200C/C	BOTTOM DIST.
K (SLAB THICKNESS 115)	19	8 ϕ	150C/C	BOTTOM MAIN
	20	8 ϕ	200C/C	BOTTOM DIST.
L (SLAB THICKNESS 115)	21	8 ϕ	150C/C	BOTTOM MAIN
	22	8 ϕ	200C/C	BOTTOM DIST.
M (SLAB THICKNESS 115)	23	8 ϕ	175C/C	BOTTOM MAIN
	24	8 ϕ	200C/C	BOTTOM DIST.
N (SLAB THICKNESS 115)	25	8 ϕ	150C/C	BOTTOM MAIN
	26	8 ϕ	200C/C	BOTTOM DIST.
O (SLAB THICKNESS 115)	27	8 ϕ	125C/C	BOTTOM MAIN
	28	8 ϕ	175C/C	BOTTOM DIST.
P (SLAB THICKNESS 115)	29	8 ϕ	200C/C	BOTTOM MAIN
	30	8 ϕ	200C/C	BOTTOM DIST.

PROJECT

TYPE - 4 RESIDENCE P.W.D. DEHRADUN (SUPER)

TITLE

REINF. DETAIL OF FIRST FLOOR SLAB & BEAMS

DRAWN	DATE	DRG. NO.	REV. NO.
MANISHA	12.11. 2012	TYPE- 4- STR.- 9	1

CONSULTANT :
SUNEET PRASAD
STRUCTURAL &
CONSULTING ENGINEER

Checked and approved

Suneet Prasad
SUNEET PRASAD
B. E., M. E. (CIVIL), MIV, FIV
AUTHORIZED STRUCTURAL ENGINEER
20, PHASE-I, ENGINEERS ENCLAVE
G.M.S. ROAD, DEHRADUN-248 001
REG. No: DoH - UK / ASE - III / 2008

SUBHASH CHANDRA GUPTA
B.E. Civil (Hon's), M. TECH. (Structure)
REG. No. DOH-UK/ASE-VI/2008
University of Petrolium & Energy Studies

BAR MARK	BAR DIA.	SPACING	DESCRIPTION
35	8Φ	400C/C	TOP MAIN
36	8Φ	250C/C	TOP MAIN
37	8Φ	250C/C	TOP MAIN
38	8Φ	250C/C	TOP MAIN
39	8Φ	250C/C	TOP MAIN
40	8Φ	250C/C	TOP MAIN
41	8Φ	250C/C	TOP MAIN
42	8Φ	250C/C	TOP MAIN
43	8Φ	400C/C	TOP MAIN
44	10Φ	400C/C	TOP MAIN
45	10Φ	350C/C	TOP MAIN
46	8Φ	350C/C	TOP MAIN
47	10Φ	400C/C	TOP MAIN
48	8Φ	400C/C	TOP MAIN
49	8Φ	300C/C	TOP MAIN
50	10Φ	150C/C	TOP MAIN
51	8Φ	300C/C	TOP MAIN
52	8Φ	400C/C	TOP MAIN
53	8Φ	300C/C	TOP MAIN
54	10Φ	150C/C	TOP MAIN

BAR MARK	BAR DIA.	SPACING	DESCRIPTION
55	10Φ	150C/C	TOP MAIN
56	8Φ	350C/C	TOP MAIN
57	8Φ	300C/C	TOP MAIN
58	8Φ	400C/C	TOP MAIN
59	8Φ	300C/C	TOP MAIN
60	8Φ	400C/C	TOP MAIN
61	8Φ	250C/C	TOP MAIN
62	8Φ	250C/C	TOP MAIN
63	8Φ	350C/C	TOP MAIN
64	8Φ	300C/C	TOP MAIN
65	8Φ	400C/C	TOP MAIN
66	8Φ	400C/C	TOP MAIN
67	8Φ	400C/C	TOP MAIN

(a) = 2 nos.- 16 tor
(b) = 2 nos.- 16 tor
(b1) = 1 nos.- 12 tor
(c) = 2 nos.- 16 tor

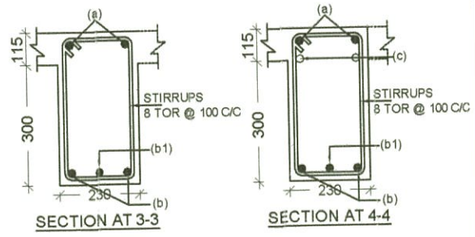

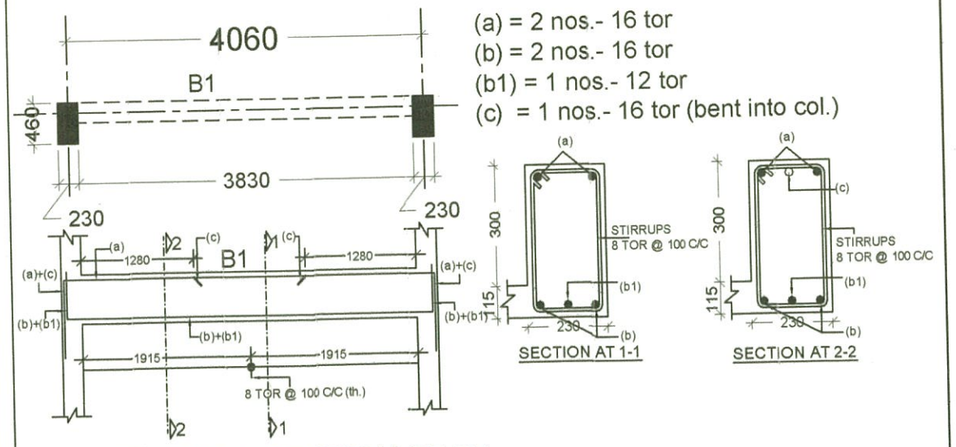

(a) = 2 nos.- 16 tor
(b) = 2 nos.- 16 tor
(b1) = 1 nos.- 12 tor
(c) = 1 nos.- 16 tor (bent into col.)

LONGITUDINAL SECTION OF B1

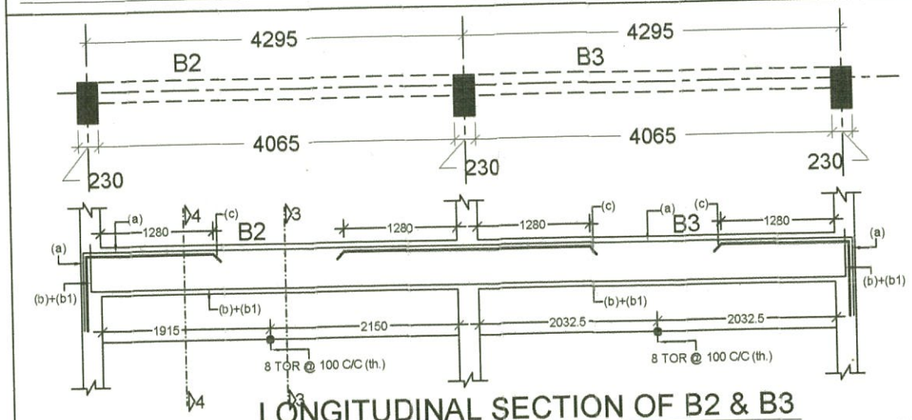

LONGITUDINAL SECTION OF B2 & B3

(a) = 3 nos.- 16 tor
(a1) = 2 nos.- 12 tor
(b) = 2 nos.- 16 tor
(b1) = 1 nos.- 12 tor

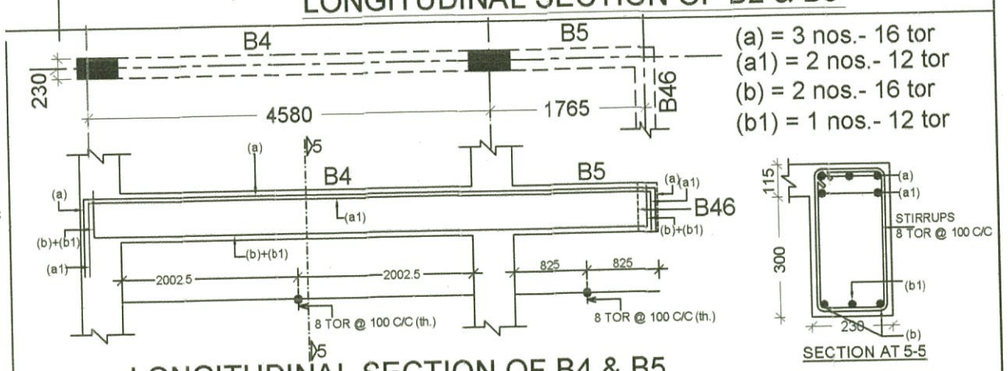

LONGITUDINAL SECTION OF B4 & B5

PROJECT
TYPE - 4 RESIDENCE P.W.D. DEHRADUN (SUPER)

TITLE
REINF. DETAIL OF FIRST FLOOR SLAB & BEAMS

DRAWN	DATE	DRG. NO.	REV. NO.
MANISHA	12.11. 2012	TYPE- 4- STR.- 10	1

CONSULTANT :
SUNEET PRASAD
STRUCTURAL & CONSULTING ENGINEER

Suneet Prasad.
SUNEET PRASAD
B. E., M. E. (CIVIL), M I V, F I V
AUTHORIZED STRUCTURAL ENGINEER
20, PHASE-I, ENGINEERS ENCLAVE
G.M.S. ROAD, DEHRADUN-248 001
REG. No: DoH - UK / ASE - III / 2008

Checked and approve
Gupta
SUBHASH CHANDRA GUPTA
B.E. Civil (H ɔn's), M. TECH. (Structure)
Reg. No. DOH-UK/ASE-VI/2008
University of Petrolium & Energy Studie

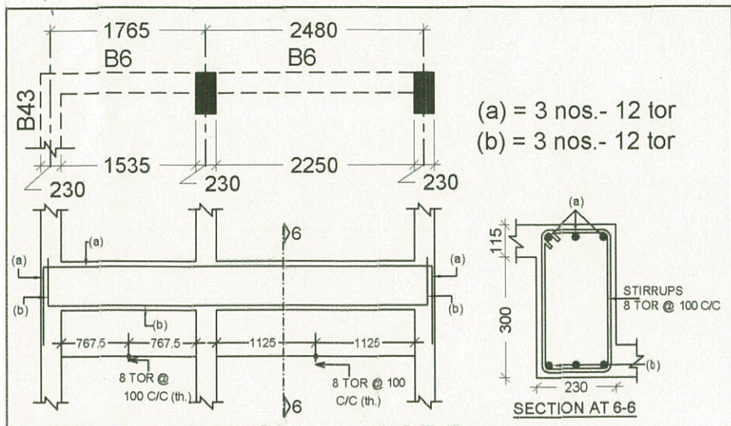

LONGITUDINAL SECTION OF B6

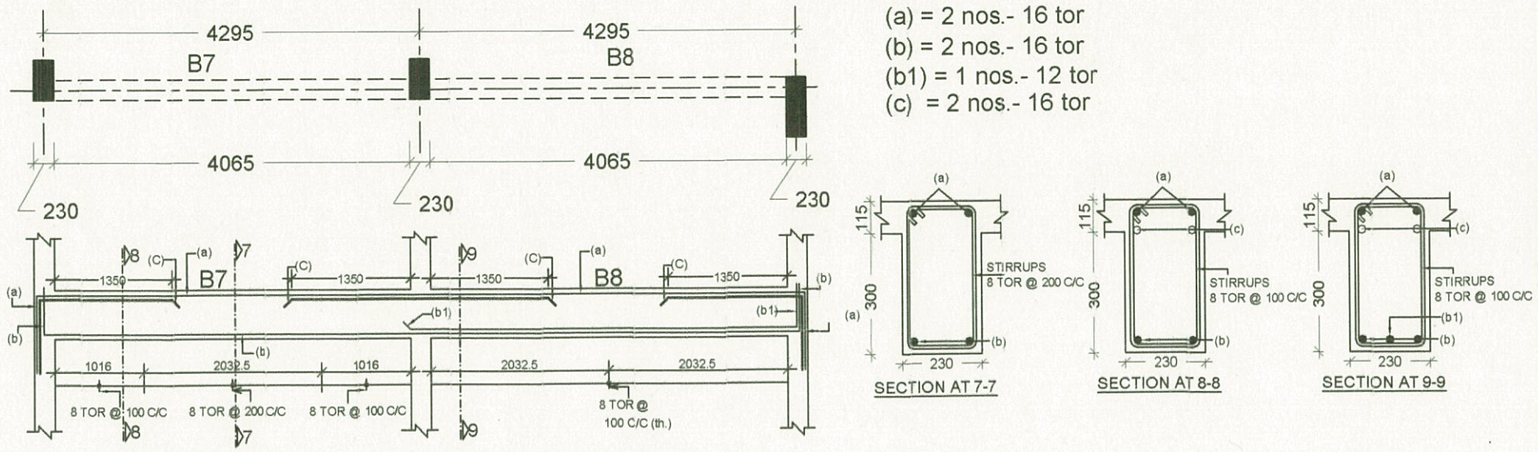

LONGITUDINAEL SECTION OF B7 & B8

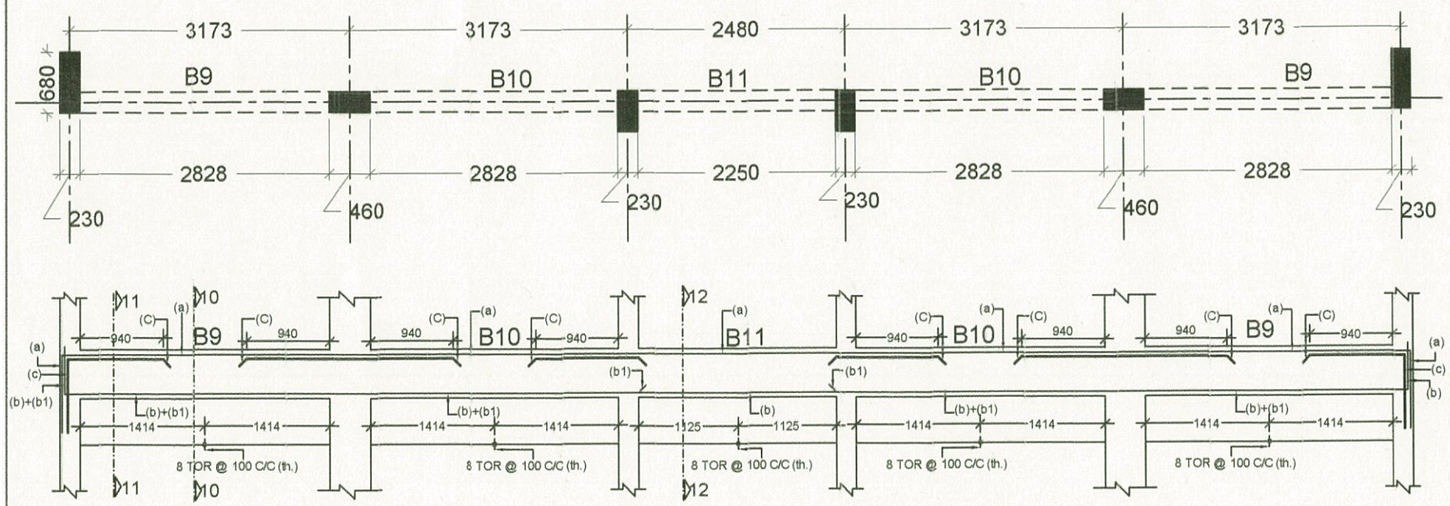

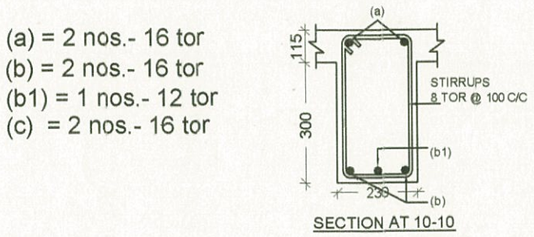

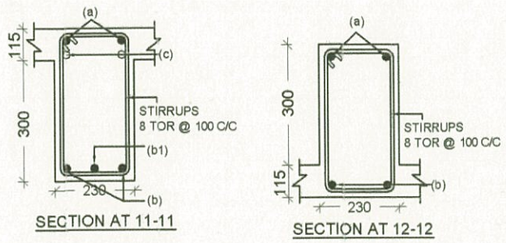

LONGITUDINAL SECTION OF B9,B10 & B11

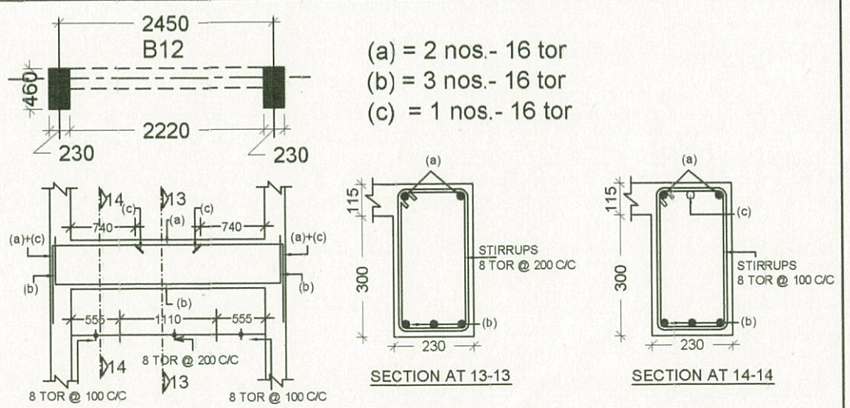

LONGITUDINAL SECTION OF B12

PROJECT

TYPE - 4 RESIDENCE P.W.D. DEHRADUN (SUPER)

TITLE

REINF. DETAIL OF FIRST FLOOR SLAB & BEAMS

DRAWN	DATE	DRG. NO.	REV. NO.
MANISHA	12.11. 2012	TYPE- 4- STR.- 11	1

CONSULTANT :

SUNEET PRASAD
STRUCTURAL & CONSULTING ENGINEER

Suneet Prasad.
SUNEET PRASAD
B. E., M. E. (CIVIL), M I V, F I V
AUTHORIZED STRUCTURAL ENGINEER
28, PHASE-I, ENGINEERS ENCLAVE
G.M.S. ROAD, DEHRADUN-248 001
REG. No: DoH - UK / ASE - III / 2008

Checked and approve
Gupta

SUBHASH CHANDRA GUPTA
B.E. Civil (Hon's), M. TECH. (Structure)
Reg. No. DOH-UK/ASE-VI/2008
University of Petrolium & Energy Studies

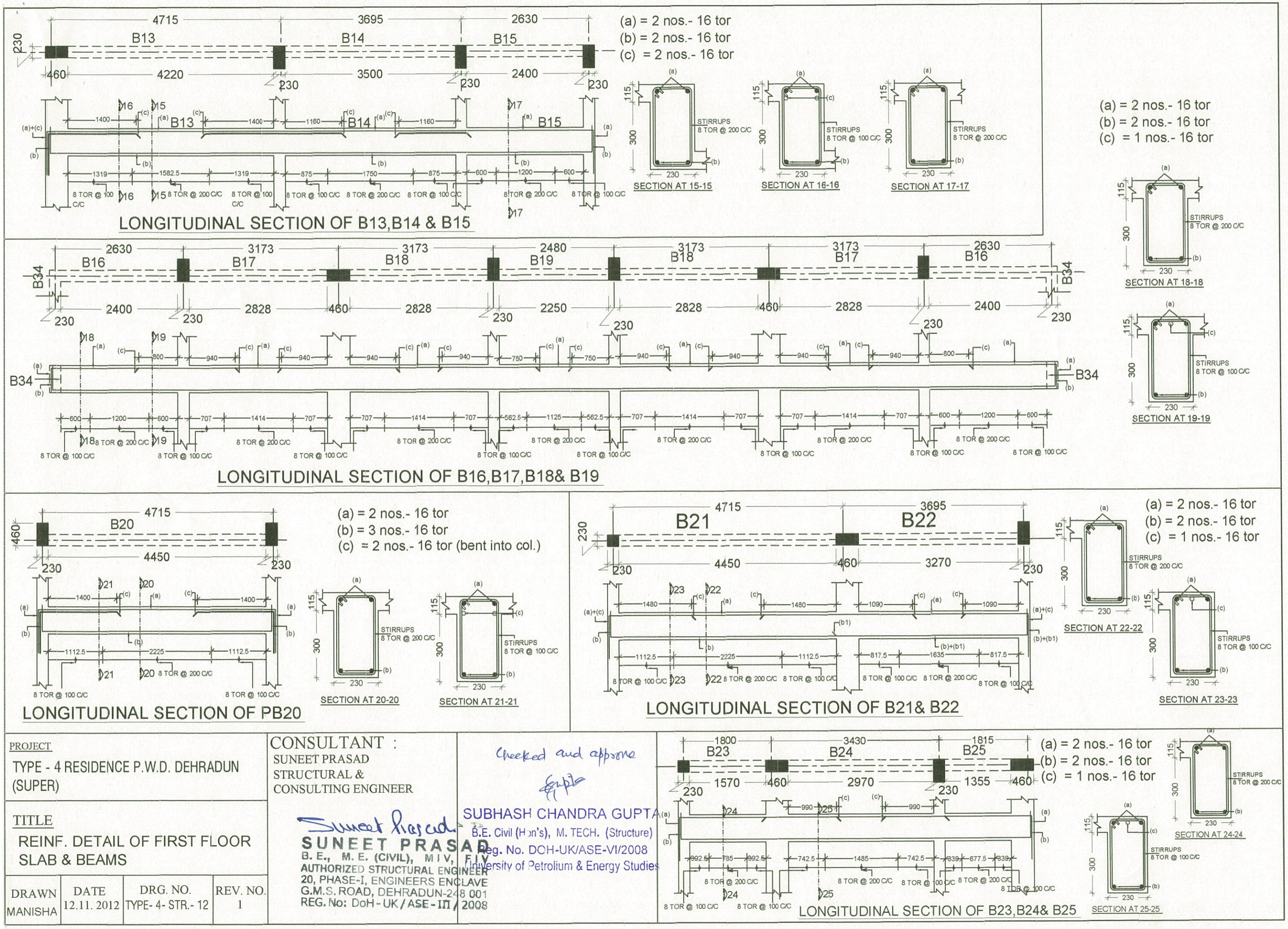

PROJECT

TYPE - 4 RESIDENCE P.W.D. DEHRADUN (SUPER)

TITLE

REINF. DETAIL OF FIRST FLOOR SLAB & BEAMS

DRAWN	DATE	DRG. NO.	REV. NO.
MANISHA	12.11. 2012	TYPE- 4- STR.- 12	1

CONSULTANT :

SUNEET PRASAD
STRUCTURAL &
CONSULTING ENGINEER

Suneet Prasad

SUNEET PRASAD
B. E., M. E. (CIVIL), M I V, F I V
AUTHORIZED STRUCTURAL ENGINEER
20, PHASE-I, ENGINEERS ENCLAVE
G.M.S. ROAD, DEHRADUN-248 001
REG. No: DoH - UK / ASE - III / 2008

Checked and approve

SUBHASH CHANDRA GUPTA
B.E. Civil (Hon's), M. TECH. (Structure)
Reg. No. DOH-UK/ASE-VI/2008
University of Petrolium & Energy Studies

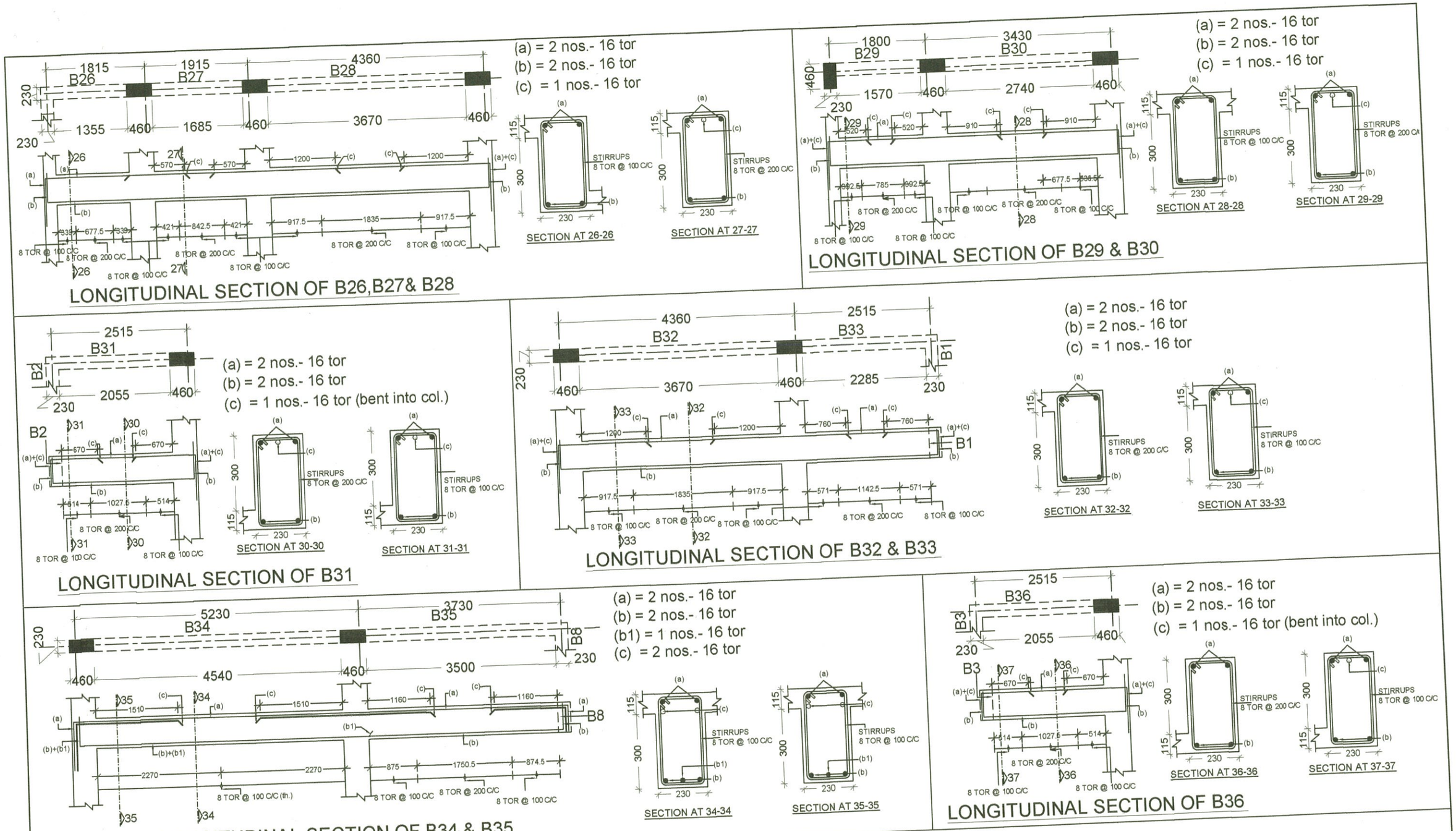

PROJECT

TYPE - 4 RESIDENCE P.W.D. DEHRADUN (SUPER)

TITLE

REINF. DETAIL OF FIRST FLOOR SLAB & BEAMS

DRAWN	DATE	DRG. NO.	REV. NO.
MANISHA	12.11. 2012	TYPE- 4- STR.- 13	1

CONSULTANT :

SUNEET PRASAD
STRUCTURAL & CONSULTING ENGINEER

Suneet Prasad
SUNEET PRASAD
B. E., M. E. (CIVIL), MIV, FIV
AUTHORIZED STRUCTURAL ENGINEER
20, PHASE-I, ENGINEERS ENCLAVE
G.M.S. ROAD, DEHRADUN-248 001
REG. No: DoH - UK / ASE - III / 2008

Checked and approve
Gupta
SUBHASH CHANDRA GUPTA
B.E. Civil (Hon's), M. TECH. (Structure)
Reg. No. DOH-UK/ASE-VI/2008
University of Petroleum & Energy Studies

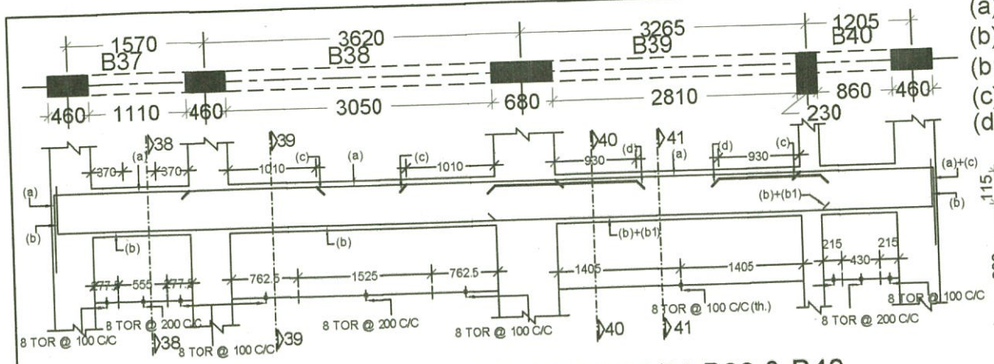

LONGITUDINAL SECTION OF B37,B8,B39 & B40

(a) = 2 nos.- 16 tor
(b) = 2 nos.- 16 tor
(b1) = 1 nos.- 16 tor
(c) = 1 nos.- 16 tor
(d) = 2 nos.- 16 tor

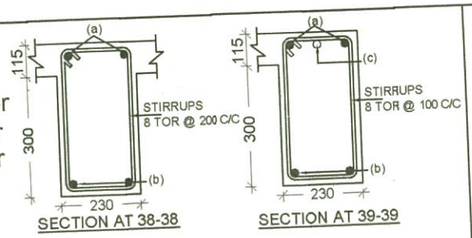

SECTION AT 38-38

SECTION AT 39-39

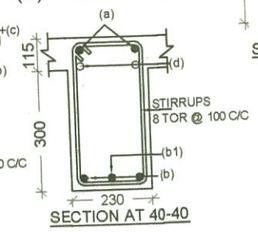

SECTION AT 40-40

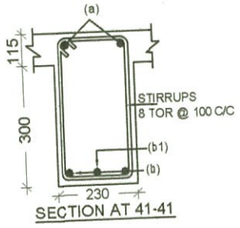

SECTION AT 41-41

(a) = 2 nos.- 12 tor
(b) = 3 nos.- 16 tor
(c) = 1 nos.- 16 tor
(bent into col.)

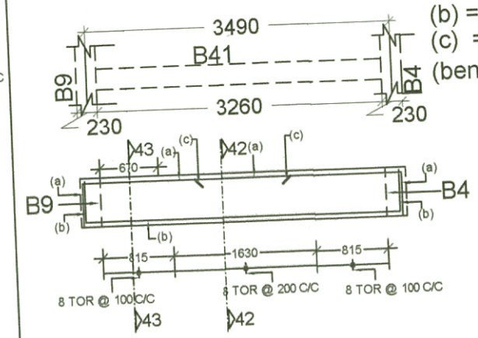

LONGITUDINAL SECTION OF B41

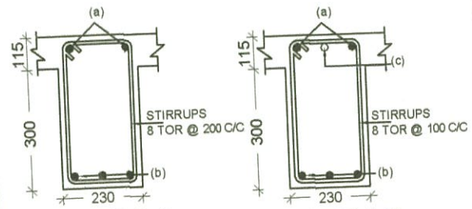

SECTION AT 42-42

SECTION AT 43-43

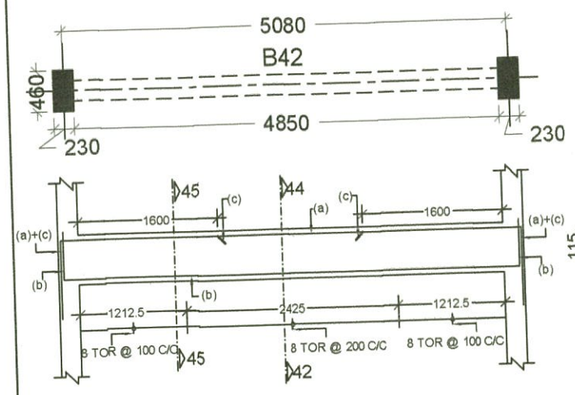

LONGITUDINAL SECTION OF B42

(a) = 2 nos.- 12 tor
(b) = 3 nos.- 16 tor
(c) = 1 nos.- 16 tor (bent into col.)

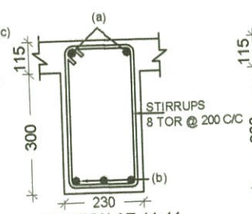

SECTION AT 44-44

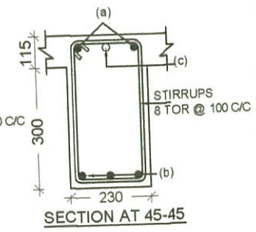

SECTION AT 45-45

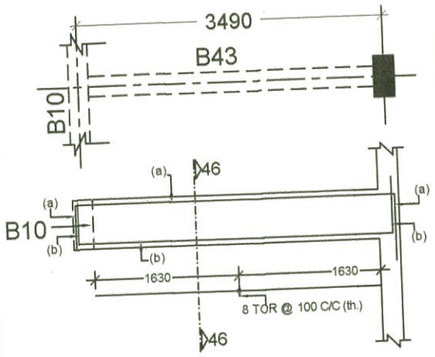

LONGITUDINAL SECTION OF B43

(a) = 3 nos.- 12 tor
(b) = 3 nos.- 12 tor

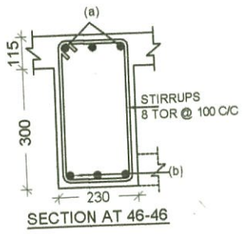

SECTION AT 46-46

(a) = 2 nos.- 16 tor
(b) = 2 nos.- 16 tor
(c) = 1nos.- 16 tor

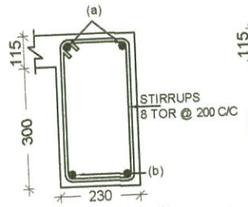

SECTION AT 47-47

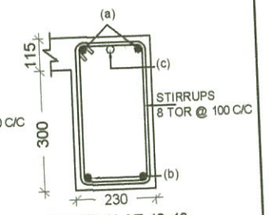

SECTION AT 48-48

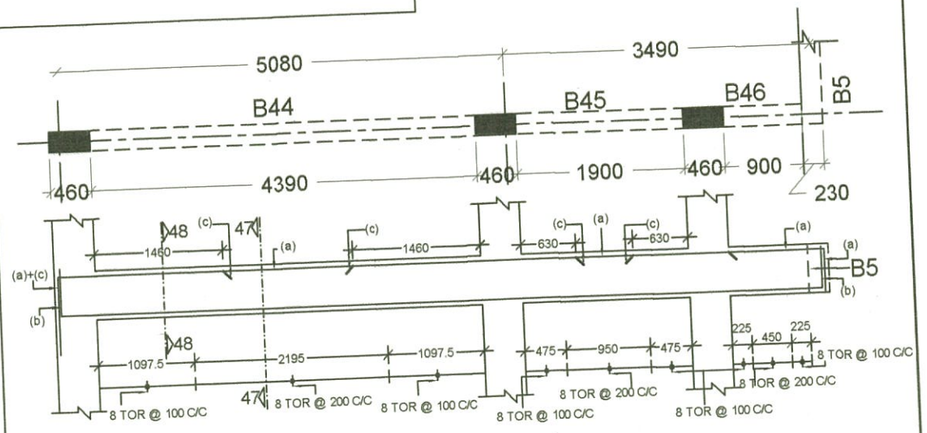

LONGITUDINAL SECTION OF B44,B45 & B46

PROJECT
TYPE - 4 RESIDENCE P.W.D. DEHRADUN (SUPER)

TITLE
REINF. DETAIL OF FIRST FLOOR SLAB & BEAMS

DRAWN	DATE	DRG. NO.	REV. NO.
MANISHA	12.11. 2012	TYPE- 4- STR.- 14	1

CONSULTANT :
SUNEET PRASAD
STRUCTURAL & CONSULTING ENGINEER

Suneet Prasad
SUNEET PRASAD
B. E., M. E. (CIVIL), M I V, F I V
AUTHORIZED STRUCTURAL ENGINEER
20, PHASE-I, ENGINEERS ENCLAVE
G.M.S. ROAD, DEHRADUN-248 001
REG. No: DoH - UK / ASE - III / 2008

Checked and approve

SUBHASH CHANDRA GUPTA
B.E. Civil (Hon's), M. TECH. (Structure)
Reg. No. DOH-UK/ASE-VI/2008
University of Petroleum & Energy Studies

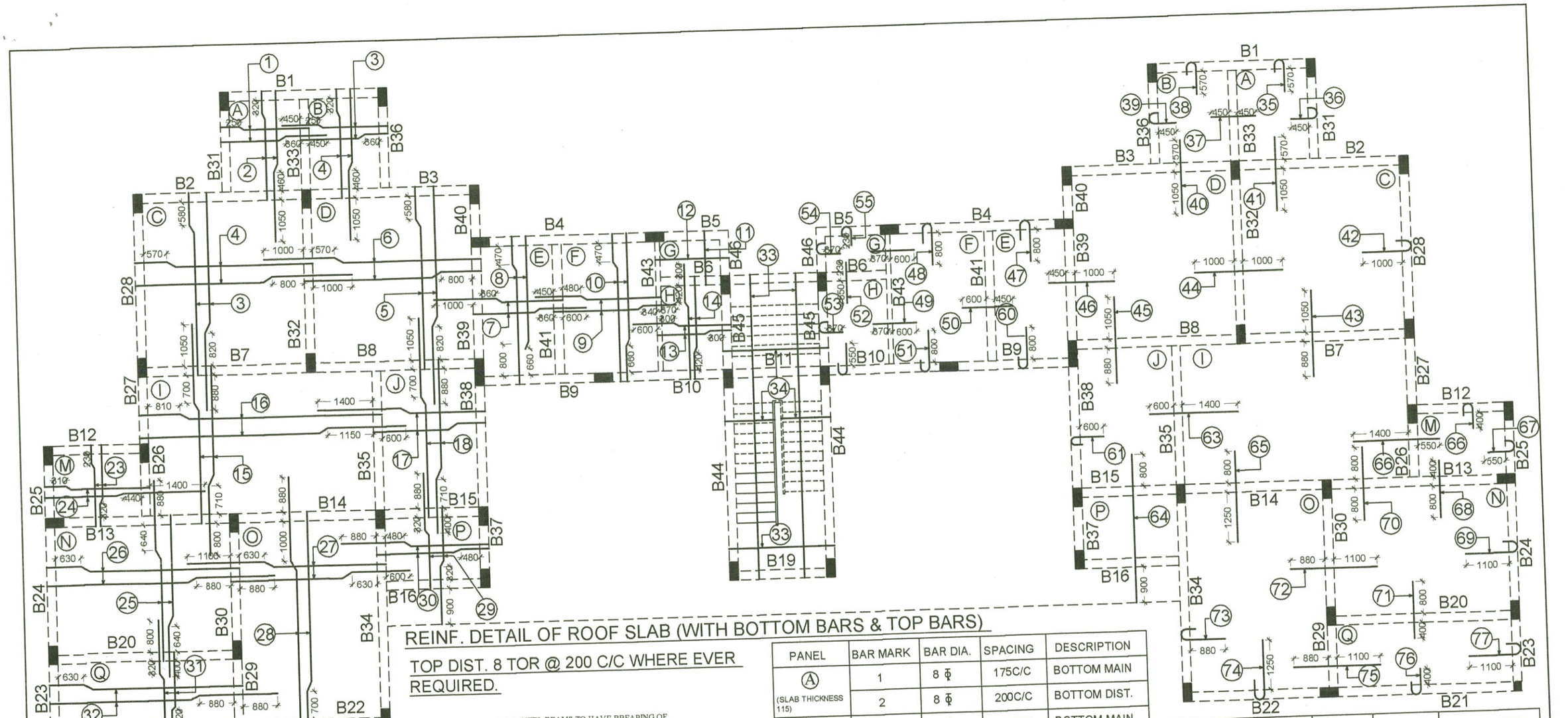

REINF. DETAIL OF ROOF SLAB (WITH BOTTOM BARS & TOP BARS)

TOP DIST. 8 TOR @ 200 C/C WHERE EVER REQUIRED.

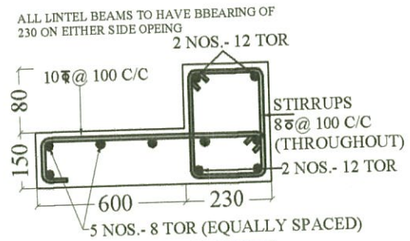

TYPICAL BEAM/ SUNSHADE DETAIL

PANEL	BAR MARK	BAR DIA.	SPACING	DESCRIPTION
A (SLAB THICKNESS 115)	1	8 ϕ	175C/C	BOTTOM MAIN
	2	8 ϕ	200C/C	BOTTOM DIST.
B (SLAB THICKNESS 115)	1	8 ϕ	175C/C	BOTTOM MAIN
	2	8 ϕ	200C/C	BOTTOM DIST.
C (SLAB THICKNESS 115)	3	8 ϕ	125C/C	BOTTOM MAIN
	4	8 ϕ	125C/C	BOTTOM DIST.
D (SLAB THICKNESS 115)	5	8 ϕ	125C/C	BOTTOM MAIN
	6	8 ϕ	125C/C	BOTTOM DIST.
E (SLAB THICKNESS 115)	7	8 ϕ	175C/C	BOTTOM MAIN
	8	8 ϕ	200C/C	BOTTOM DIST.
F (SLAB THICKNESS 115)	9	8 ϕ	175C/C	BOTTOM MAIN
	10	8 ϕ	200C/C	BOTTOM DIST.
G (SLAB THICKNESS 115)	11	8 ϕ	200C/C	BOTTOM MAIN
	12	8 ϕ	200C/C	BOTTOM DIST.
H (SLAB THICKNESS 115)	13	8 ϕ	175C/C	BOTTOM MAIN
	14	8 ϕ	200C/C	BOTTOM DIST.
I (SLAB THICKNESS 115)	15	8 ϕ	125C/C	BOTTOM MAIN
	16	8 ϕ	175C/C	BOTTOM DIST.

PANEL	BAR MARK	BAR DIA.	SPACING	DESCRIPTION
J (SLAB THICKNESS 115)	17	8 ϕ	175C/C	BOTTOM MAIN
	18	8 ϕ	200C/C	BOTTOM DIST.
M (SLAB THICKNESS 115)	23	8 ϕ	175C/C	BOTTOM MAIN
	24	8 ϕ	200C/C	BOTTOM DIST.
N (SLAB THICKNESS 115)	25	8 ϕ	150C/C	BOTTOM MAIN
	26	8 ϕ	200C/C	BOTTOM DIST.
O (SLAB THICKNESS 115)	27	8 ϕ	125C/C	BOTTOM MAIN
	28	8 ϕ	175C/C	BOTTOM DIST.
P (SLAB THICKNESS 115)	29	8 ϕ	200C/C	BOTTOM MAIN
	30	8 ϕ	200C/C	BOTTOM DIST.
Q (SLAB THICKNESS 115)	31	8 ϕ	200C/C	BOTTOM MAIN
	32	8 ϕ	200C/C	BOTTOM DIST.
STAIRCASE (SLAB THICKNESS 115)	33	12ϕ	100C/C	BOTTOM MAIN
	34	8ϕ	150C/C	BOTTOM DIST.

PROJECT

TYPE - 4 RESIDENCE P.W.D. DEHRADUN (SUPER)

TITLE

REINF. DETAIL OF ROOF SLAB & BEAMS

DRAWN	DATE	DRG. NO.	REV. NO.
MANISHA	12.11. 2012	TYPE- 4- STR.- 15	1

CONSULTANT :

SUNEET PRASAD
STRUCTURAL &
CONSULTING ENGINEER

Suneet Prasad

SUNEET PRASAD
B. E., M. E. (CIVIL), M I V, F I V
AUTHORIZED STRUCTURAL ENGINEER
20, PHASE-I, ENGINEERS ENCLAVE
G.M.S. ROAD, DEHRADUN-248 001
REG. No: DoH - UK / ASE - III / 2008

Checked and approve

Gupta

SUBHASH CHANDRA GUPTA
B.E. Civil (Hon's), M. TECH. (Structure)
Reg. No. DOH-UK/ASE-VI/2006
University of Petrolium & Energy Studi

BAR MARK	BAR DIA.	SPACING	DESCRIPTION
35	8Φ	400C/C	TOP MAIN
36	8Φ	250C/C	TOP MAIN
37	8Φ	250C/C	TOP MAIN
38	8Φ	250C/C	TOP MAIN
39	8Φ	250C/C	TOP MAIN
40	8Φ	250C/C	TOP MAIN
41	8Φ	250C/C	TOP MAIN
42	8Φ	250C/C	TOP MAIN
43	8Φ	400C/C	TOP MAIN
44	10Φ	400C/C	TOP MAIN
45	10Φ	350C/C	TOP MAIN
46	8Φ	350C/C	TOP MAIN
47	10Φ	400C/C	TOP MAIN
48	8Φ	400C/C	TOP MAIN
49	8Φ	300C/C	TOP MAIN
50	10Φ	150C/C	TOP MAIN
51	8Φ	300C/C	TOP MAIN
52	8Φ	400C/C	TOP MAIN
53	8Φ	300C/C	TOP MAIN
54	10Φ	150C/C	TOP MAIN
55	10Φ	150C/C	TOP MAIN
56	8Φ	350C/C	TOP MAIN
63	8Φ	360C/C	TOP MAIN
64	8Φ	300C/C	TOP MAIN
65	8Φ	400C/C	TOP MAIN
66	8Φ	400C/C	TOP MAIN
67	8Φ	400C/C	TOP MAIN
68			TOP MAIN

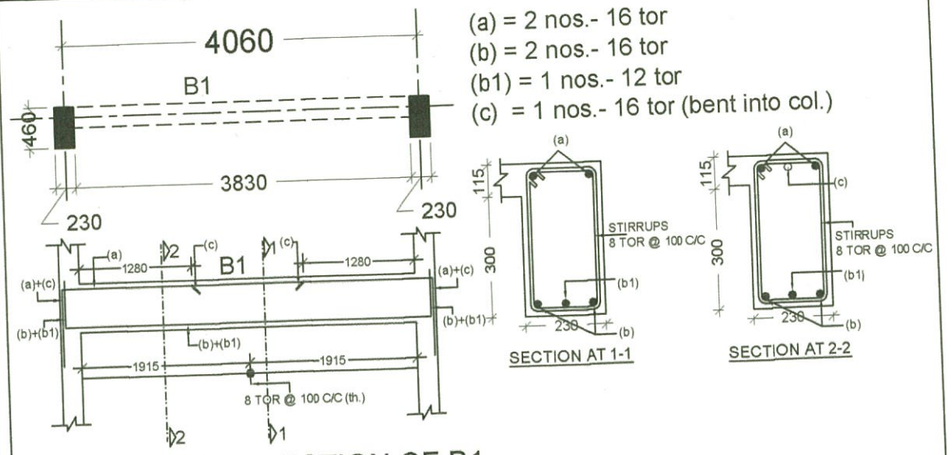

LONGITUDINAL SECTION OF B1

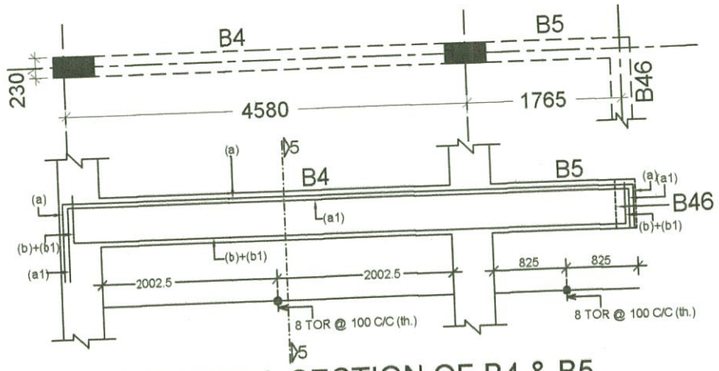

LONGITUDINAL SECTION OF B4 & B5

(a) = 3 nos.- 16 tor
(a1) = 2 nos.- 12 tor
(b) = 2 nos.- 16 tor
(b1) = 1 nos.- 12 tor

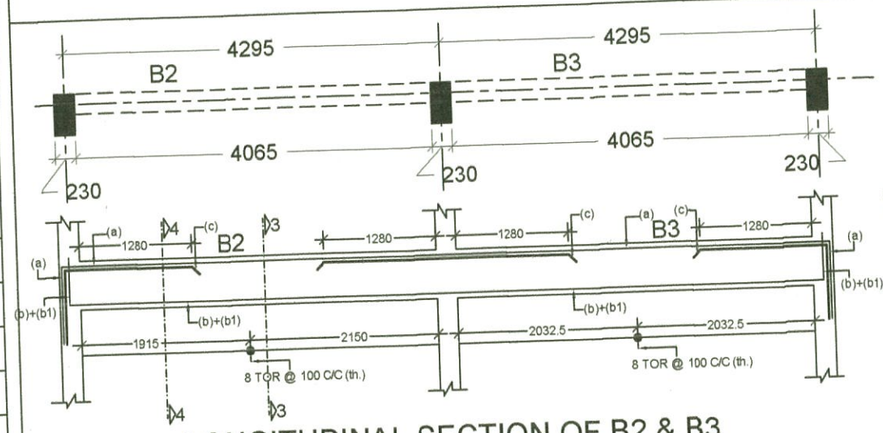

LONGITUDINAL SECTION OF B2 & B3

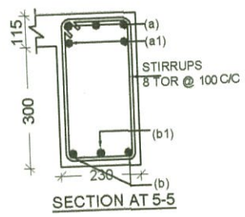

(a) = 3 nos.- 12 tor
(b) = 3 nos.- 12 tor

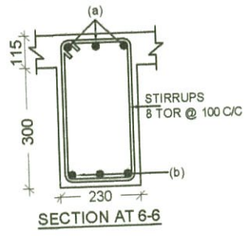

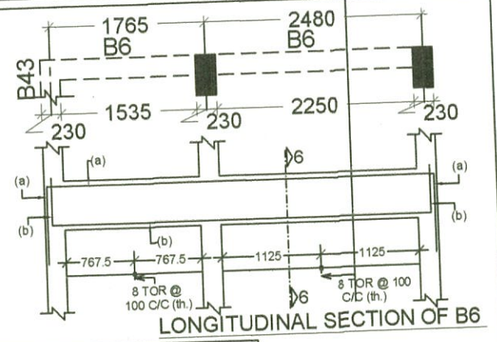

LONGITUDINAL SECTION OF B6

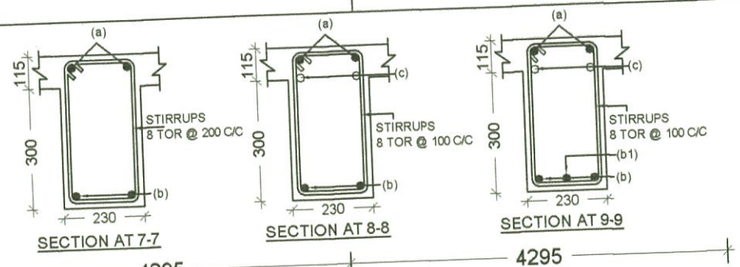

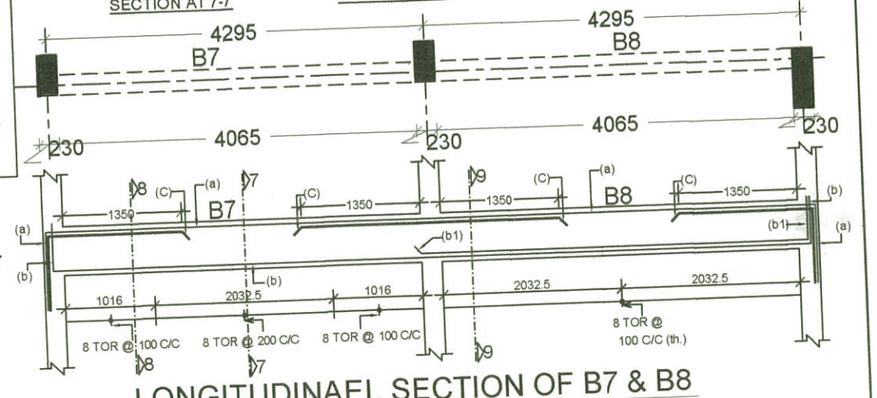

(a) = 2 nos.- 16 tor
(b) = 2 nos.- 16 tor
(b1) = 1 nos.- 12 tor
(c) = 2 nos.- 16 tor

LONGITUDINAEL SECTION OF B7 & B8

PROJECT
TYPE - 4 RESIDENCE P.W.D. DEHRADUN (SUPER)

TITLE
REINF. DETAIL OF ROOF SLAB & BEAMS

DRAWN	DATE	DRG. NO.	REV. NO.
MANISHA	12.11. 2012	TYPE- 4- STR.- 16	1

CONSULTANT :
SUNEET PRASAD
STRUCTURAL &
CONSULTING ENGINEER

Suneet Prasad
SUNEET PRASAD
B. E., M. E. (CIVIL), M I V, F I V
AUTHORIZED STRUCTURAL ENGINEER
20, PHASE-I, ENGINEERS ENCLAVE
G.M.S. ROAD, DEHRADUN-248 001
REG. No: DoH - UK / ASE - III / 2008

Checked and approve
Gupta
SUBHASH CHANDRA GUPTA
B.E. Civil (Hon's), M. TECH. (Structure)
Reg. No. DOH-UK/ASE-VI/2008
University of Petrolium & Energy Studies

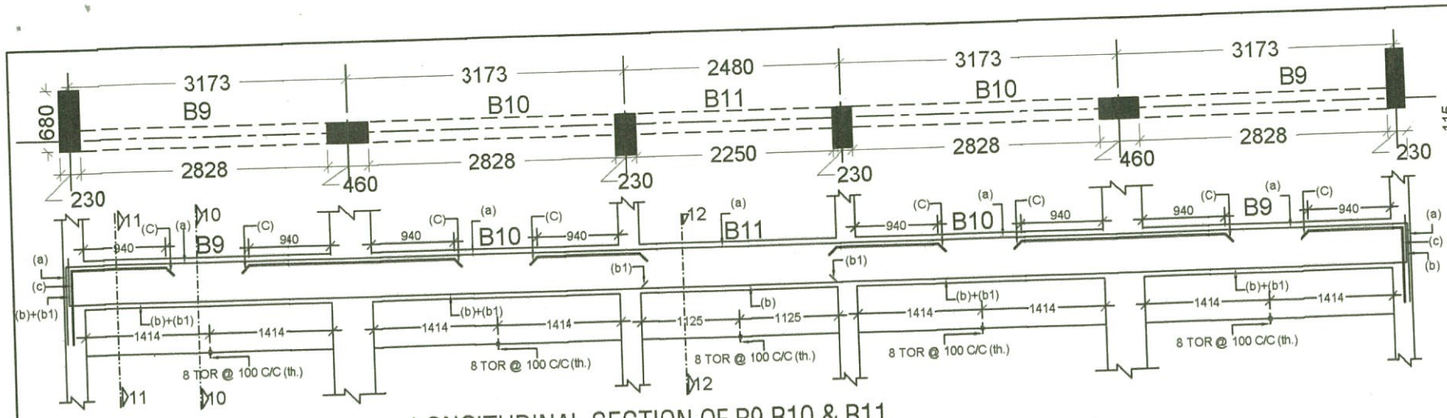

LONGITUDINAL SECTION OF B9,B10 & B11

(a) = 2 nos.- 16 tor (b1) = 1 nos.- 12 tor
(b) = 2 nos.- 16 tor (c) = 2 nos.- 16 tor

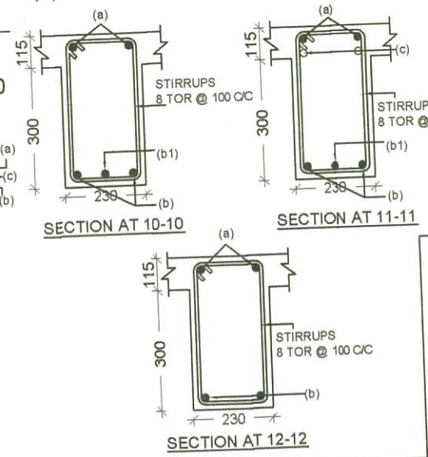

SECTION AT 10-10

SECTION AT 11-11

SECTION AT 12-12

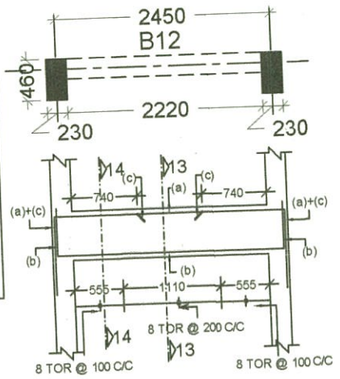

(a) = 2 nos.- 16 tor
(b) = 3 nos.- 16 tor
(c) = 1 nos.- 16 tor

LONGITUDINAL SECTION OF B12

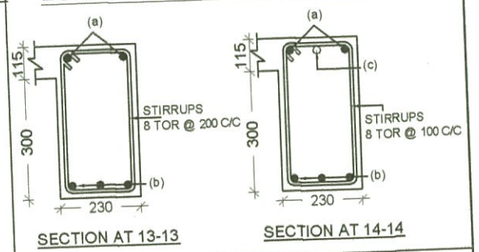

SECTION AT 13-13

SECTION AT 14-14

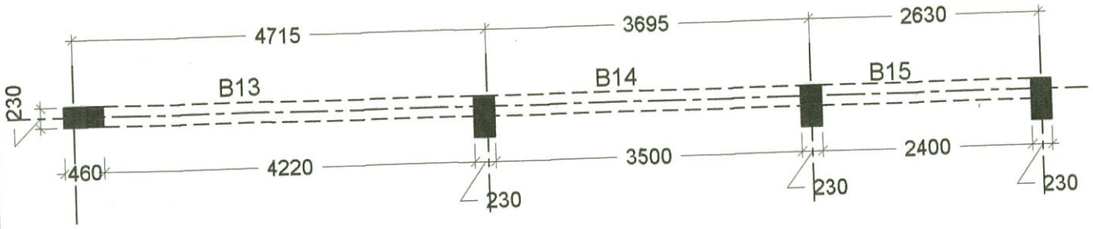

(a) = 2 nos.- 16 tor
(b) = 2 nos.- 16 tor
(c) = 2 nos.- 16 tor

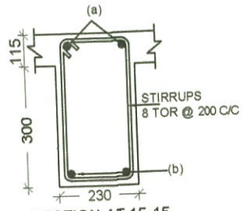

SECTION AT 15-15

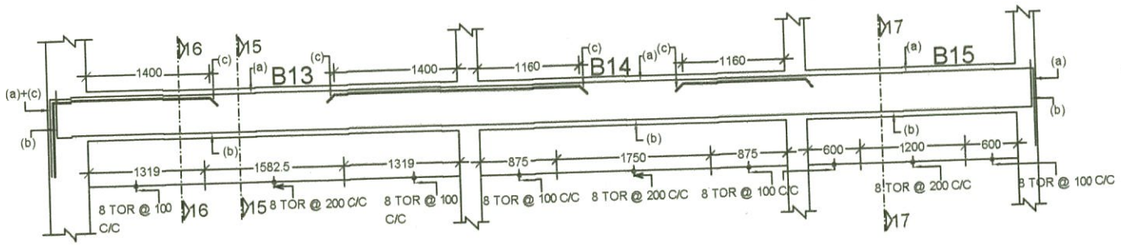

LONGITUDINAL SECTION OF B13,B14 & B15

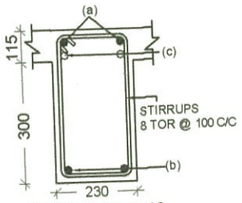

SECTION AT 16-16

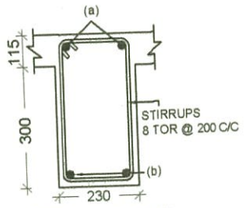

SECTION AT 17-17

(a) = 2 nos.- 16 tor
(b) = 2 nos.- 16 tor
(c) = 1 nos.- 16 tor

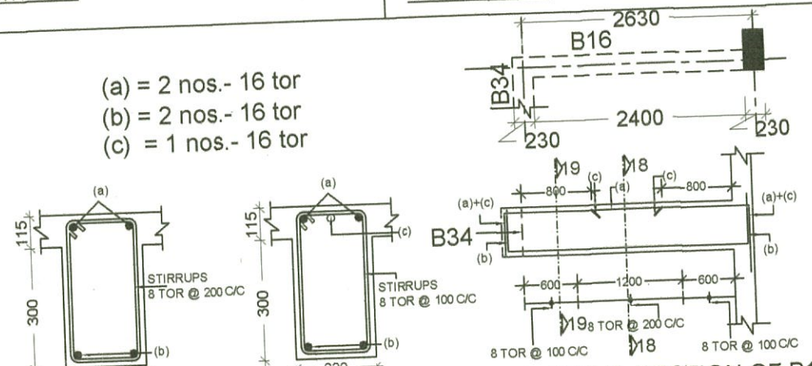

SECTION AT 18-18

SECTION AT 19-19

LONGITUDINAL SECTION OF B16

(a) = 2 nos.- 16 tor
(b) = 2 nos.- 16 tor
(c) = 1 nos.- 16 tor

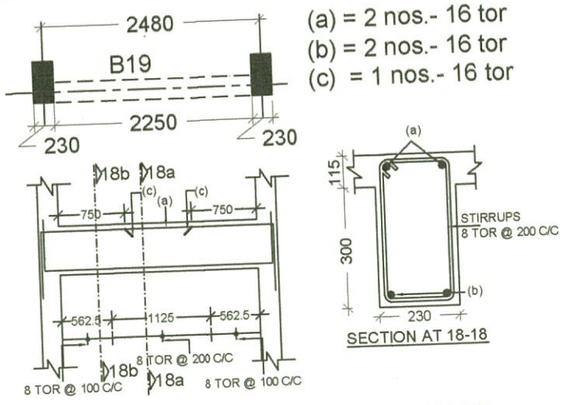

SECTION AT 18-18

SECTION AT 19-19

LONGITUDINAL SECTION OF B19

PROJECT	CONSULTANT :	Checked and approve
TYPE - 4 RESIDENCE P.W.D. DEHRADUN (SUPER)	SUNEET PRASAD STRUCTURAL & CONSULTING ENGINEER	SUBHASH CHANDRA GUPTA B.E. Civil (Hon's), M. TECH. (Structure) Reg. No. DOH-UK/ASE-VI/2008 University of Petroliun & Energy Stu
TITLE REINF. DETAIL OF ROOF SLAB & BEAMS	Suneet Prasad SUNEET PRASAD B. E., M. E. (CIVIL), M I V, F I V AUTHORIZED STRUCTURAL ENGINEER 20, PHASE-I, ENGINEERS ENCLAVE G.M.S. ROAD, DEHRADUN-248 001 REG. No: DoH - UK / ASE - III / 2008	

DRAWN	DATE	DRG. NO.	REV. NO.
MANISHA	12.11. 2012	TYPE- 4- STR.- 17	1

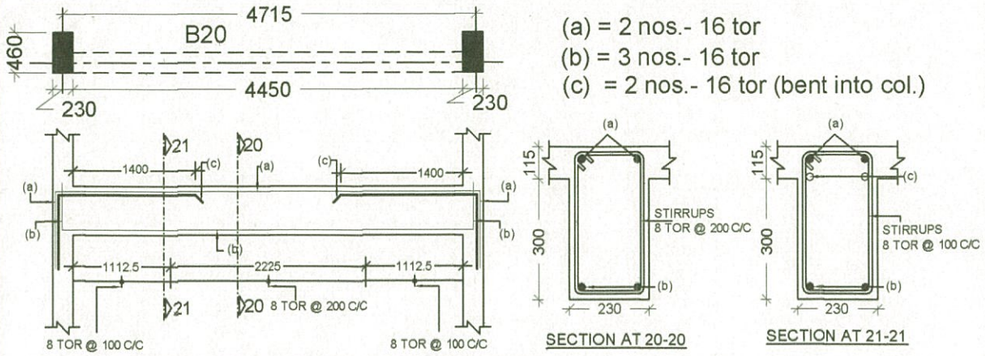

LONGITUDINAL SECTION OF PB20

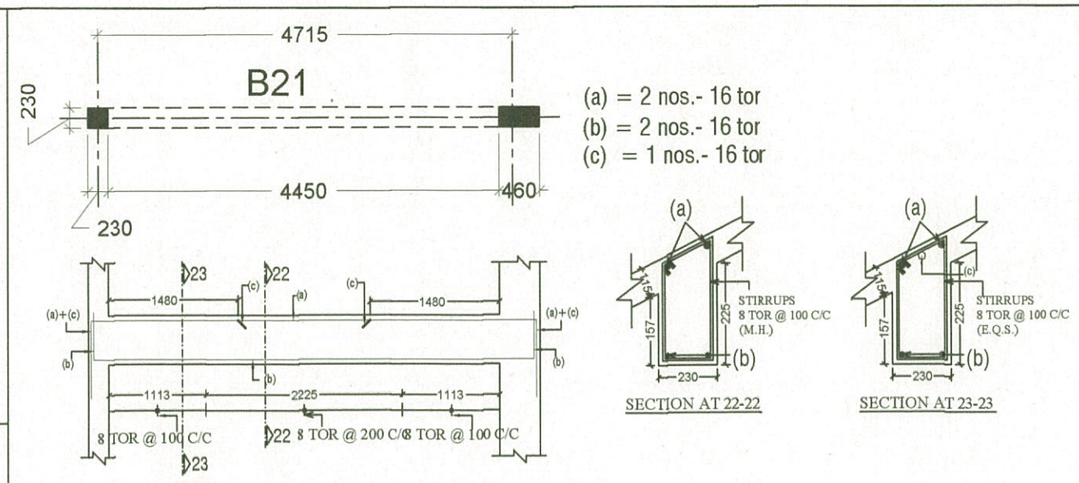

LONGITUDINAL SECTION OF B21

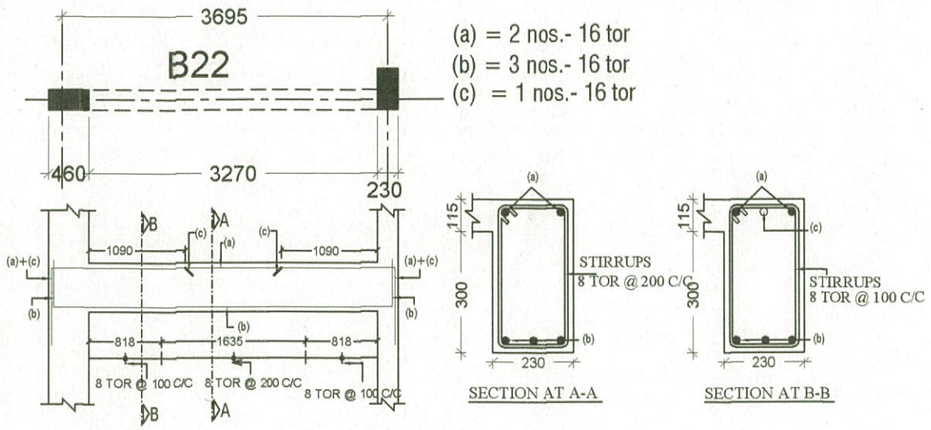

LONGITUDINAL SECTION OF B22

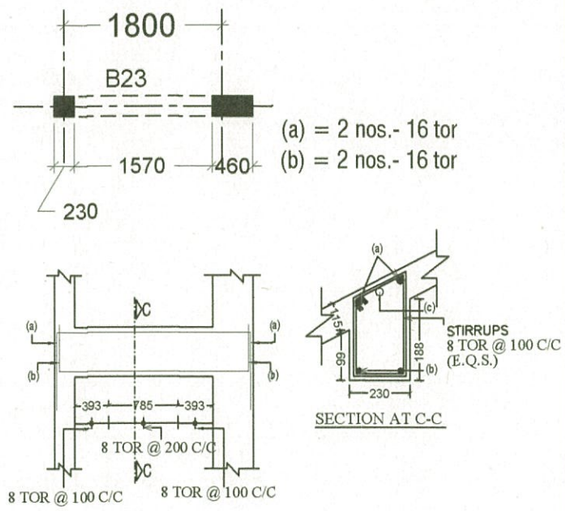

LONGITUDINAL SECTION OF B23

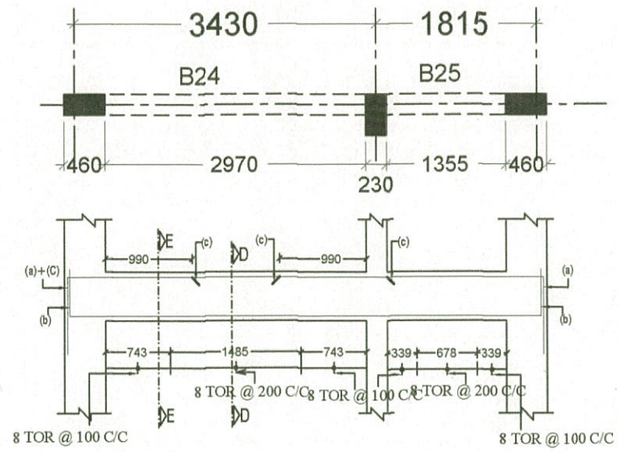

LONGITUDINAL SECTION OF B24& B25

(a) = 2 nos.- 16 tor
(b) = 2 nos.- 16 tor
(c) = 1 nos.- 16 tor

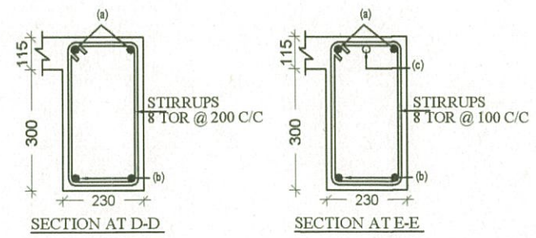

PROJECT

TYPE - 4 RESIDENCE P.W.D. DEHRADUN (SUPER)

TITLE

REINF. DETAIL OF ROOF SLAB & BEAMS

DRAWN	DATE	DRG. NO.	REV. NO.
MANISHA	12.11. 2012	TYPE- 4- STR.- 18	1

CONSULTANT :

SUNEET PRASAD
STRUCTURAL & CONSULTING ENGINEER

Suneet Prasad

SUNEET PRASAD
B. E., M. E. (CIVIL), M I V, F I V
AUTHORIZED STRUCTURAL ENGINEER
20, PHASE-I, ENGINEERS ENCLAVE
G.M.S. ROAD, DEHRADUN-248001
REG. No: DoH - UK / ASE - III / 2008

Checked and approve

SUBHASH CHANDRA GUPTA
B.E. Civil (Hon's), M. TECH. (Structure)
Reg. No. DOH-UK/ASE-VI/2008
University of Petrolium & Energy Stud

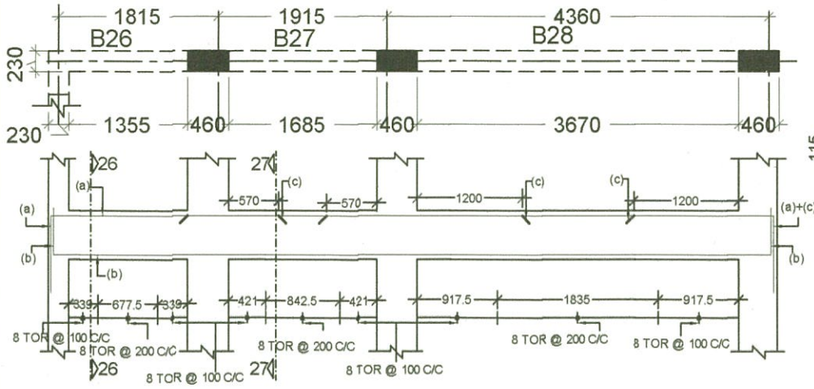

(a) = 2 nos.- 16 tor
(b) = 2 nos.- 16 tor
(c) = 1 nos.- 16 tor

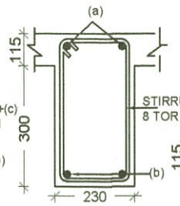

SECTION AT 26-26

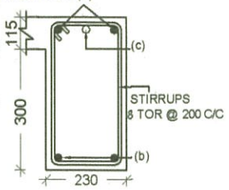

SECTION AT 27-27

LONGITUDINAL SECTION OF B26,B27& B28

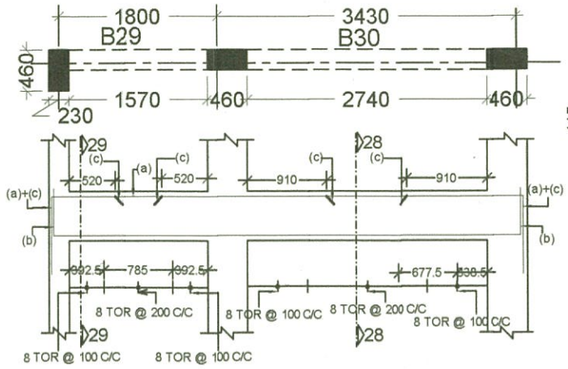

(a) = 2 nos.- 16 tor
(b) = 2 nos.- 16 tor
(c) = 1 nos.- 16 tor

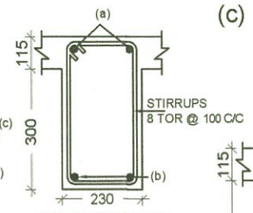

SECTION AT 28-28

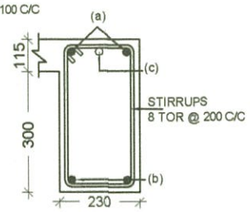

SECTION AT 29-29

LONGITUDINAL SECTION OF B29 & B30

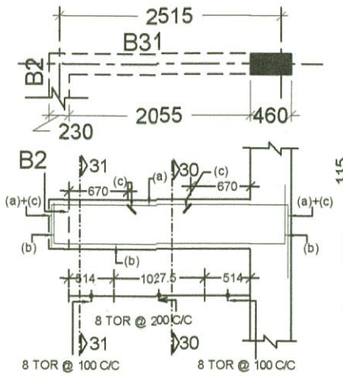

(a) = 2 nos.- 16 tor
(b) = 2 nos.- 16 tor
(c) = 1 nos.- 16 tor (bent into col.)

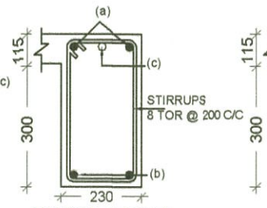

SECTION AT 30-30

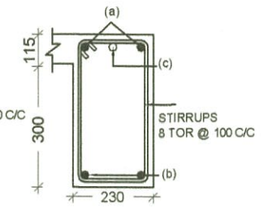

SECTION AT 31-31

LONGITUDINAL SECTION OF B31

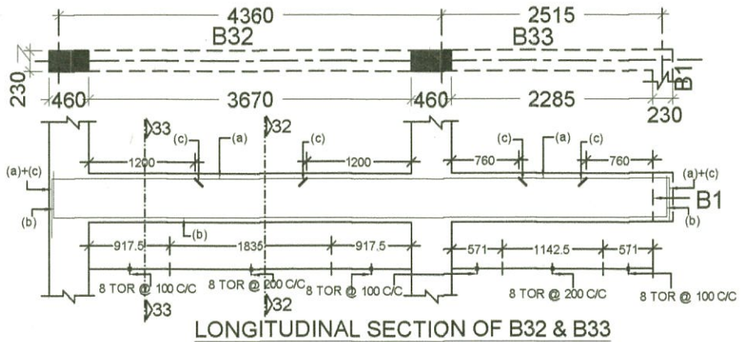

(a) = 2 nos.- 16 tor
(b) = 2 nos.- 16 tor
(c) = 1 nos.- 16 tor

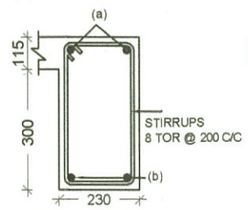

SECTION AT 32-32

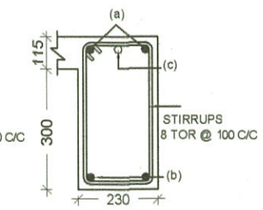

SECTION AT 33-33

LONGITUDINAL SECTION OF B32 & B33

PROJECT

TYPE - 4 RESIDENCE P.W.D. DEHRADUN (SUPER)

TITLE

REINF. DETAIL OF ROOF SLAB & BEAMS

DRAWN	DATE	DRG. NO.	REV. NO.
MANISHA	12.11. 2012	TYPE- 4- STR.- 19	1

CONSULTANT :

SUNEET PRASAD
STRUCTURAL & CONSULTING ENGINEER

Suneet Prasad
SUNEET PRASAD
B. E., M. E. (CIVIL), M I V, F I V
AUTHORIZED STRUCTURAL ENGINEER
20, PHASE-I, ENGINEERS ENCLAVE
G.M.S. ROAD, DEHRADUN-248 001
REG. No: DoH - UK / ASE - III / 2008

Checked and approve

SUBHASH CHANDRA GUPTA
B.E. Civil (Hon's), M. TECH. (Structure)
Reg. No. DOH-UK/ASE-VI/2008
University of Petrolium & Energy Studi

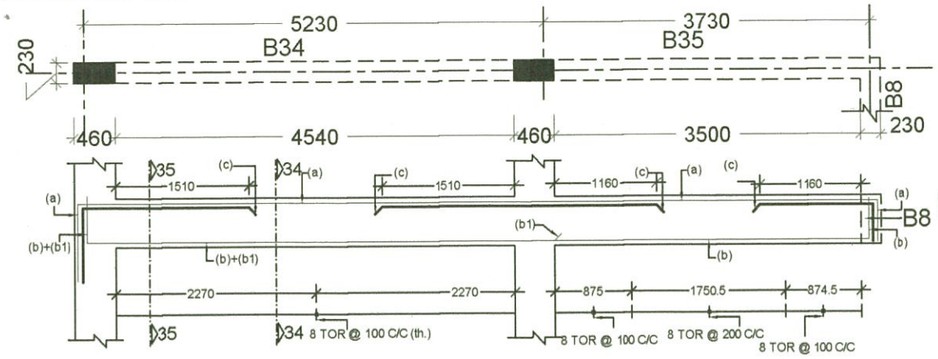

(a) = 2 nos.- 16 tor
(b) = 2 nos.- 16 tor
(b1) = 1 nos.- 16 tor
(c) = 2 nos.- 16 tor

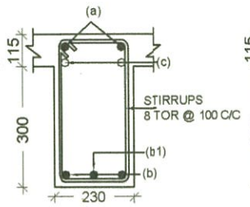

SECTION AT 34-34

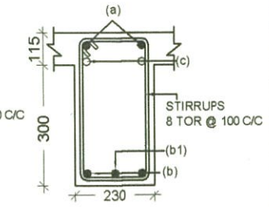

SECTION AT 35-35

LONGITUDINAL SECTION OF B34 & B35

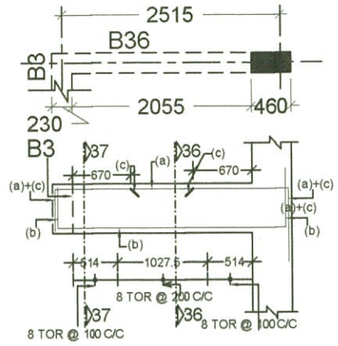

(a) = 2 nos.- 16 tor
(b) = 2 nos.- 16 tor
(c) = 1 nos.- 16 tor (bent into col.)

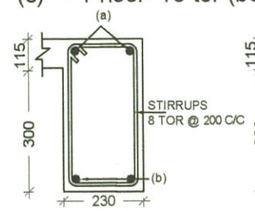

SECTION AT 36-36

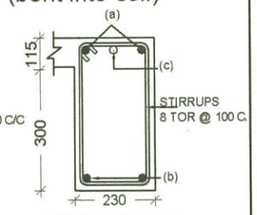

SECTION AT 37-37

LONGITUDINAL SECTION OF B36

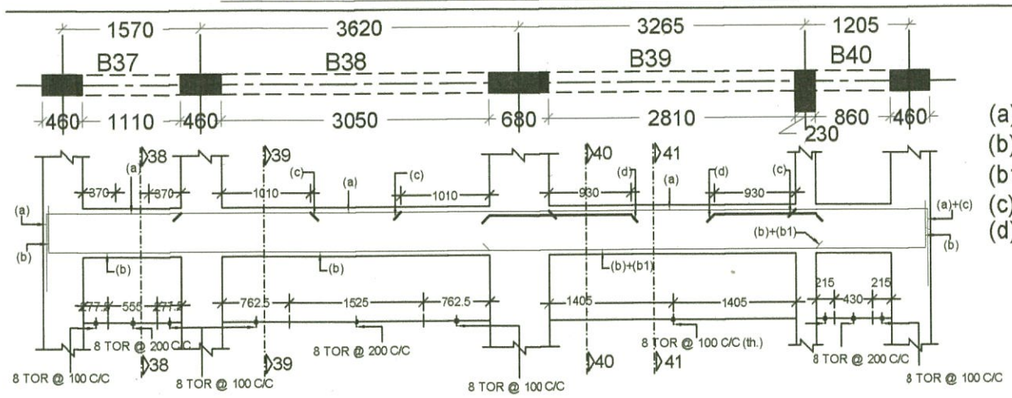

(a) = 2 nos.- 16 tor
(b) = 2 nos.- 16 tor
(b1) = 1 nos.- 16 tor
(c) = 1 nos.- 16 tor
(d) = 2 nos.- 16 tor

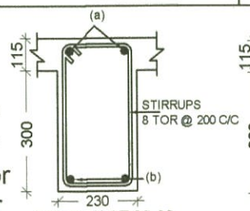

SECTION AT 38-38

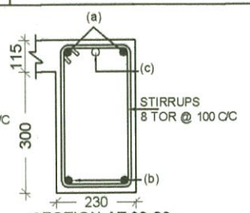

SECTION AT 39-39

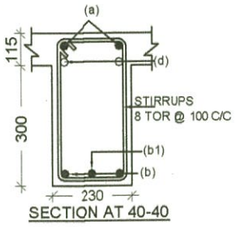

SECTION AT 40-40

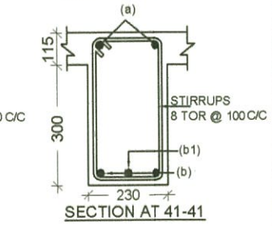

SECTION AT 41-41

LONGITUDINAL SECTION OF B37,B8,B39 & B40

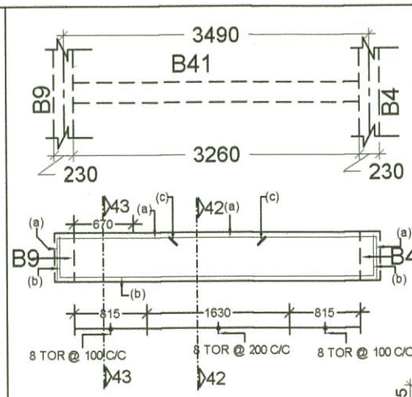

(a) = 2 nos.- 12 tc
(b) = 3 nos.- 16 tc
(c) = 1 nos.- 16 tc
(bent into col.)

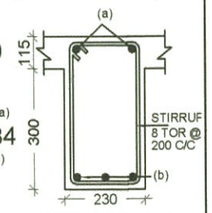

SECTION AT 42-42

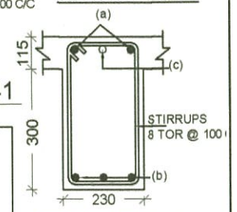

SECTION AT 43-43

LONGITUDINAL SECTION OF B41

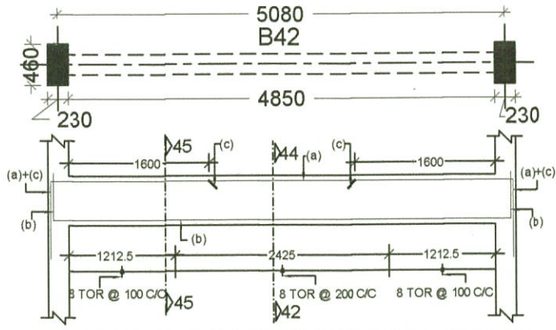

(a) = 2 nos.- 12 tor
(b) = 3 nos.- 16 tor
(c) = 1 nos.- 16 tor (bent into col.)

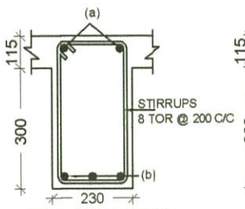

SECTION AT 44-44

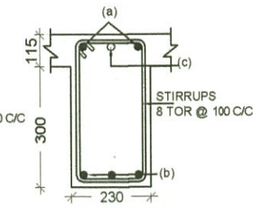

SECTION AT 45-45

LONGITUDINAL SECTION OF B42

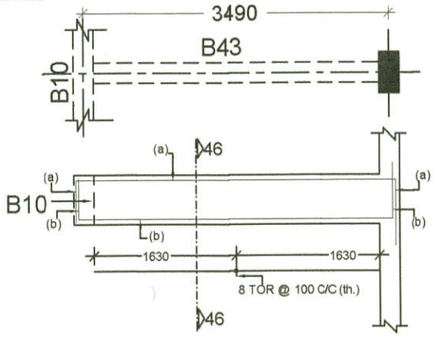

(a) = 3 nos.- 12 tor
(b) = 3 nos.- 12 tor

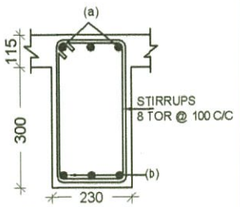

SECTION AT 46-46

LONGITUDINAL SECTION OF B43

(a) = 2 nos.- 16 tor
(b) = 2 nos.- 16 tor
(c) = 1nos.- 16 tor

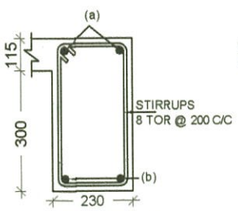

SECTION AT 47-47

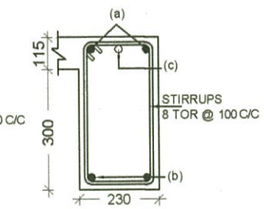

SECTION AT 48-48

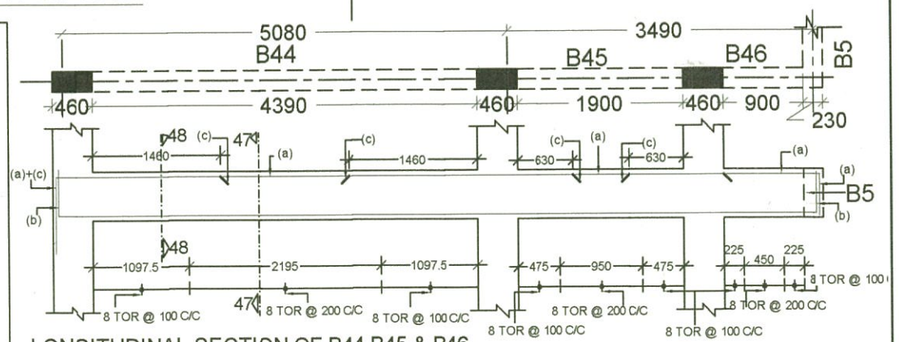

LONGITUDINAL SECTION OF B44,B45 & B46

PROJECT

TYPE - 4 RESIDENCE P.W.D. DEHRADUN (SUPER)

TITLE

REINF. DETAIL OF ROOF SLAB & BEAMS

DRAWN	DATE	DRG. NO.	REV. NO.
MANISHA	12.11. 2012	TYPE- 4- STR.- 20	1

CONSULTANT :

SUNEET PRASAD
STRUCTURAL & CONSULTING ENGINEER

Suneet Prasad.
SUNEET PRASAD
B. E., M. E. (CIVIL), M I V, F I V
AUTHORIZED STRUCTURAL ENGINEER
20, PHASE-I, ENGINEERS ENCLAVE
G.M.S. ROAD, DEHRADUN-248 001
REG. No: DoH - UK / ASE - III / 2008

Checked and approve
Gupta

SUBHASH CHANDRA GUPTA
B.E. Civil (Hon's), M. TECH. (Structure)
Reg. No. DOH-UK/ASE-VI/2008
University of Petrolium & Energy Studie

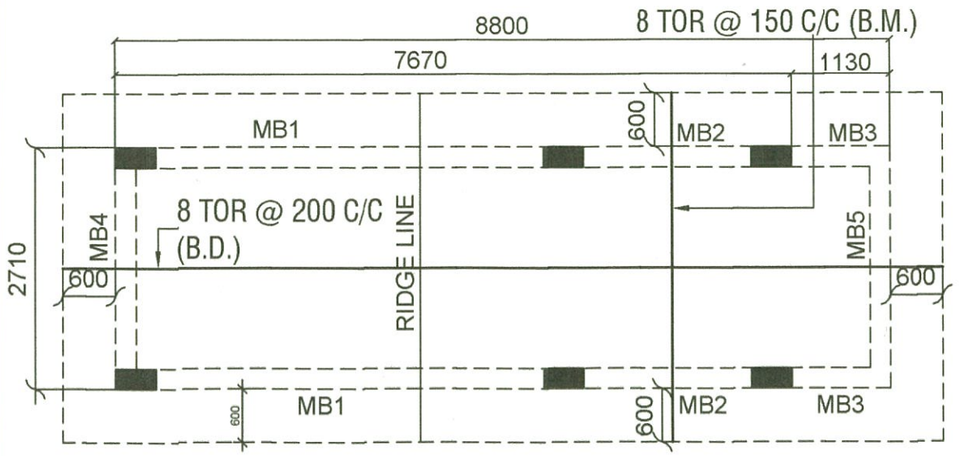

REINF. DETAIL OF MUMTY SLAB (WITH BOTTOM BARS)
115 THICK SLAB)

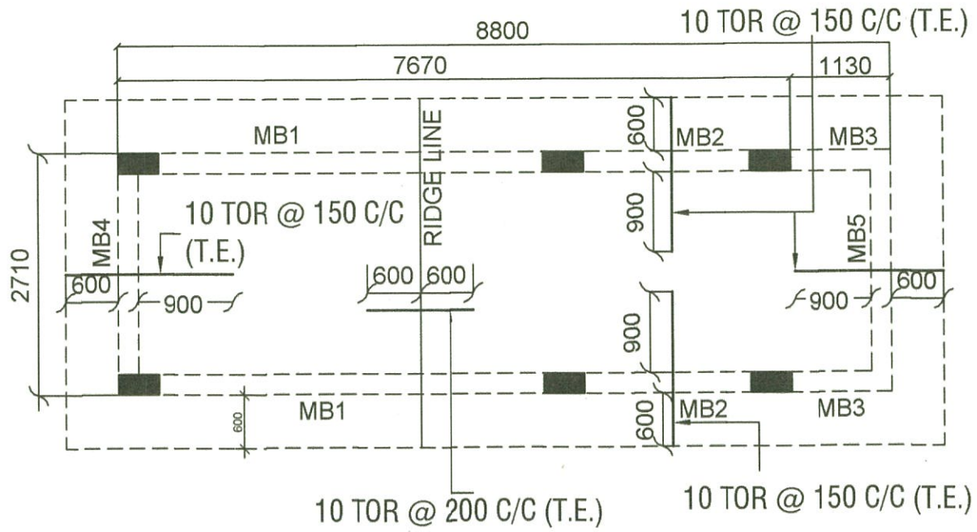

REINF. DETAIL OF MUMTY SLAB (WITH TOP BARS) 115 THICK SLAB)
TOP DISST. 8 TOR @ 200 C/C (WHEREVER REQUIRED)

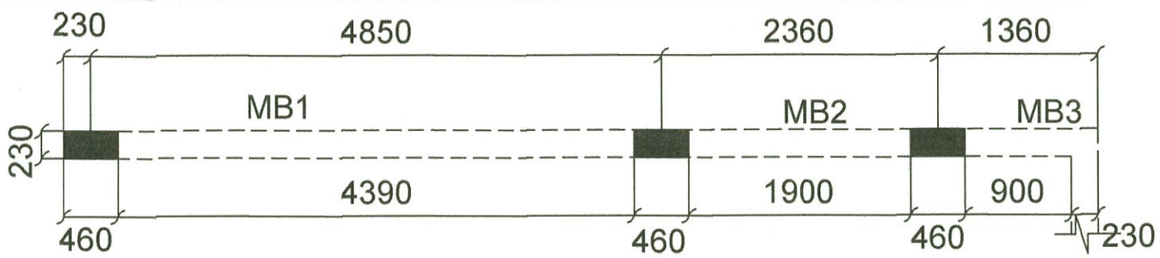

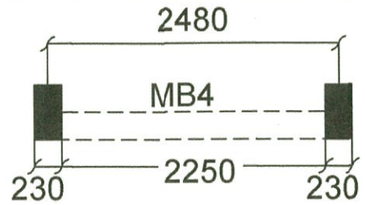

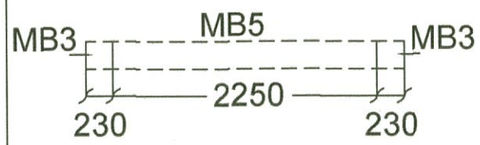

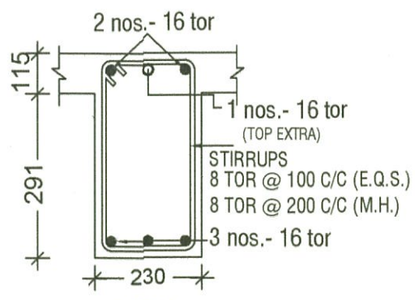

MB1

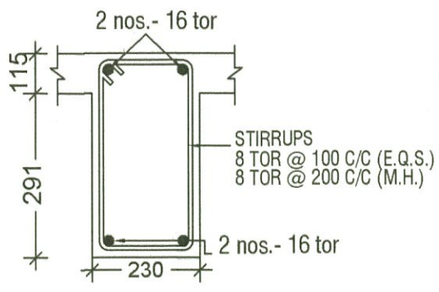

MB2

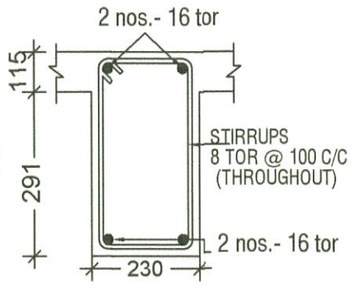

MB3

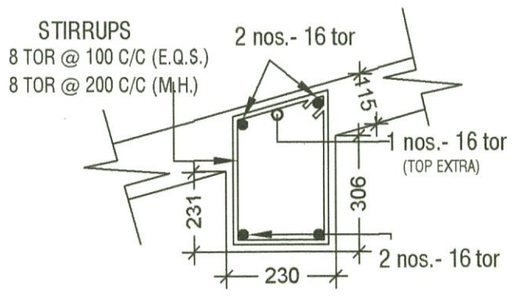

MB4

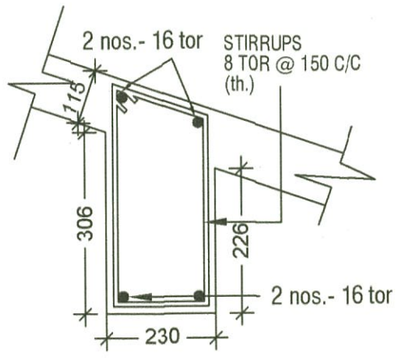

MB5

PROJECT

TYPE - 4 RESIDENCE P.W.D. DEHRADUN (SUPER)

TITLE

REINF. DETAIL OF ROOF SLAB & BEAMS

DRAWN	DATE	DRG. NO.	REV. NO.
MANISHA	12.11. 2012	TYPE- 4- STR.- 21	1

CONSULTANT :

SUNEET PRASAD
STRUCTURAL & CONSULTING ENGINEER

Suneet Prasad
SUNEET PRASAD
B. E., M. E. (CIVIL), M I V, F I V
AUTHORIZED STRUCTURAL ENGINEER
20, PHASE-I, ENGINEERS ENCLAVE
G.M.S. ROAD, DEHRADUN-248 001
REG. No: DoH - UK / ASE - III / 2008

Checked and approve

SUBHASH CHANDRA GUPTA
B.E. Civil (Hon's), M. TECH. (Structure)
Reg. No. DOH-UK/ASE-VI/2008
University of Petrolium & Energy Studies

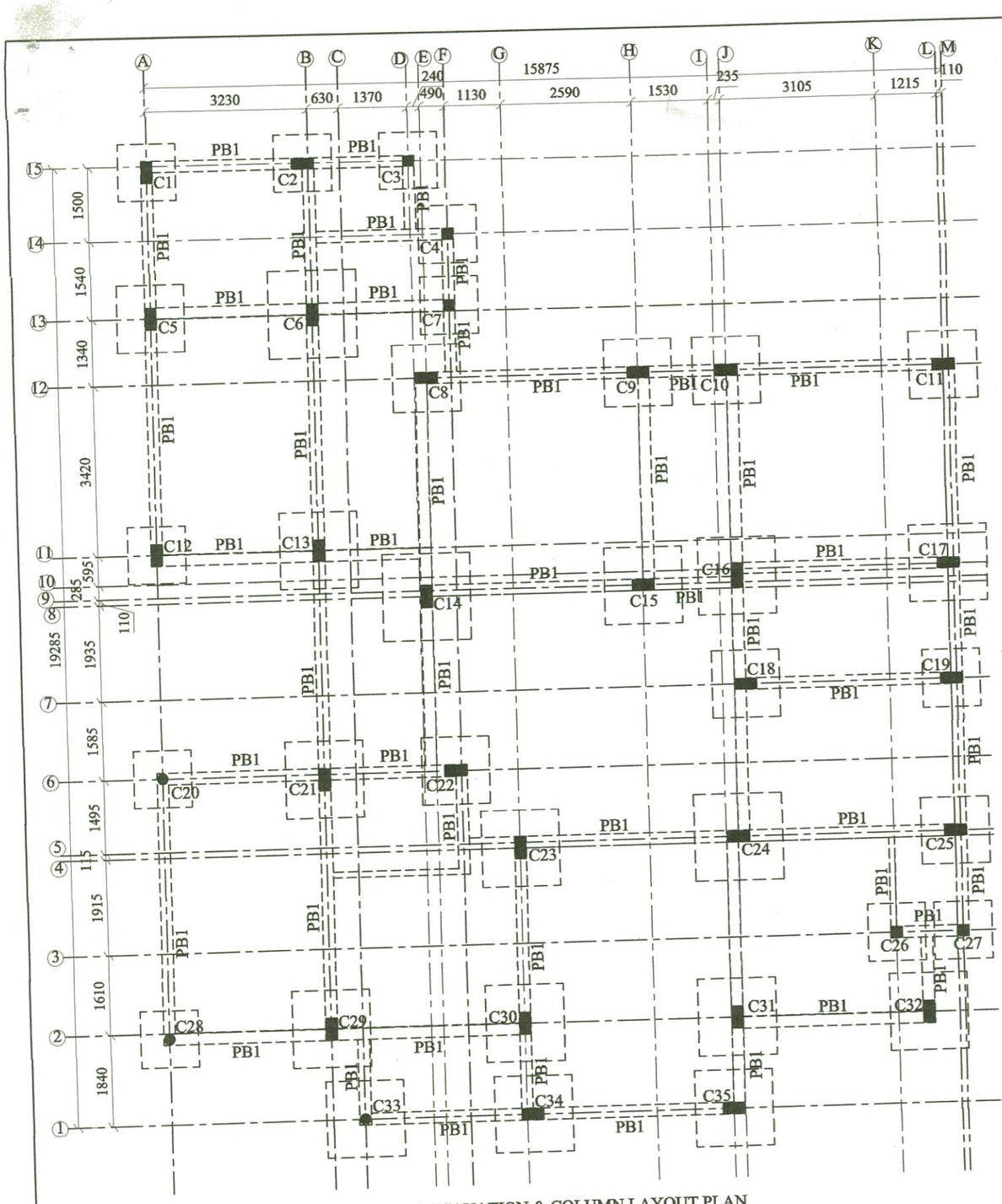

EXCAVATION & COLUMN LAYOUT PLAN

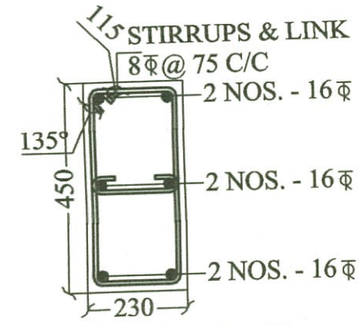

TYP. STIRRUP & LINK DETAIL
D = DIA OF STIRRUP

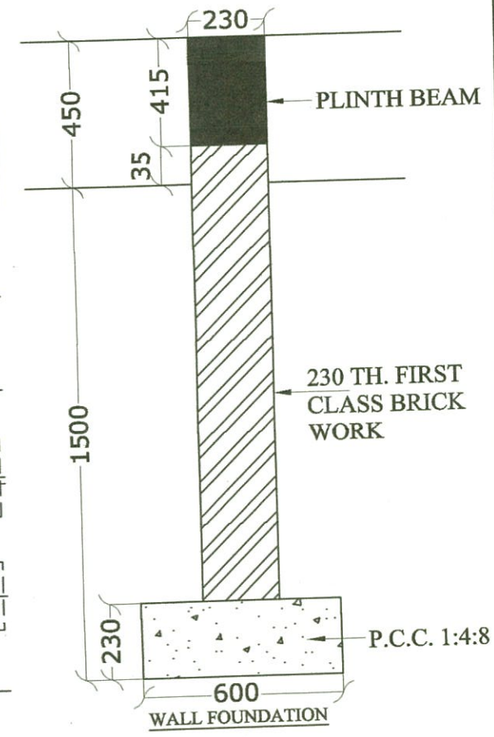

WALL FOUNDATION

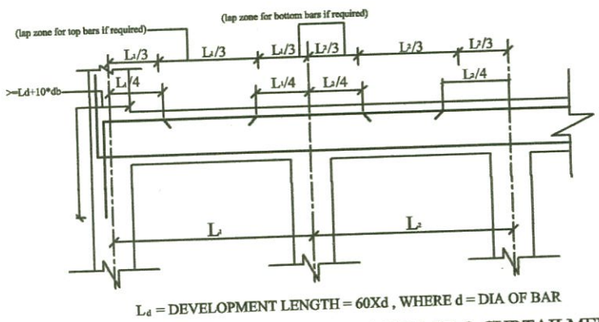

L_d = DEVELOPMENT LENGTH = 60Xd , WHERE d = DIA OF BAR

TYPICAL SECTION SHOW ANCHORAGE & CURTAILMENT OR REINFORCEMENT IN BEAMS

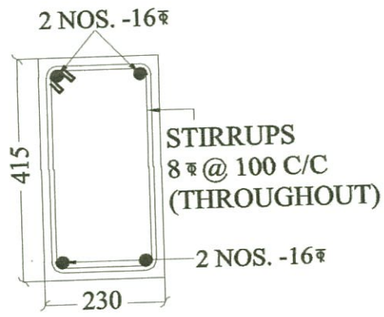

PB1

NOTES

1. READ THIS DRAWING IN CONJUCTION WITH RELEVANT ARCH. DRAWING.
2. ALL DIMENSIONS IN MM.
3. M20 GRADE CONCRETE SHALL BE USED UNLESS NOTED OTHERWISE.
4. REINFORCEMENT BAR TO BE USED SHALL BE HIGH YIELD STRENGTH DEFORMED BAR STRESS 415N/mm²
5. ANY LAP OF BAR SHALL NOT BE LESS THAN 50xDIA OF LARGER DIA.
6. CLEAR COVER TO MAIN REINF.SHALL BE AS FOLLOWS

FOOTINGS	-	50MM.
WALL	-	25MM.
COLUMN	-	40MM.
BEAM	-	25MM.
SLAB	-	20MM.

7. ALL STEEL SHOULD BE FREE OF RUST, SCALE ,GREASE, DIRT, OIL, ETC.
8. ALL CONCRETE TO BE MECHANICALLY MIXED AND VIBRATED
9. ALL CONCRETE TO BE PLACED AGAINST STEEL OR WATER ROOF PLY. PUCCA SHUTTERING
10. NET ALLOWABLE BEARING CAPACITY OF SOIL IS TAKEN AS 10.00 TONS / SQM. AT 1.50 M. DEPTH BELOW GROUND LEVEL.
11. BUILDING IS DESIGN FOR GROUND FLOOR ONLY .
12. BUILDING IS DESIGN FOR E.Q. ZONE IV.

PROJECT

TYPE - 5 RESIDENCE FOR P.W.D. DEHRADUN.

TITLE

EXCAVATION & COLUMN LAYOUT PLAN & COLUMN DETAILS.

DRAWN	DATE	DRG. NO.	REV. NO.
SEEMA	10.11. 2012	TYPE -5- STR.-1	

CONSULTANT :

SUNEET PRASAD
STRUCTURAL &
CONSULTING ENGINEER

Suneet Prasad

SUNEET PRASAD
B. E., M. E. (CIVIL), MIV, FIV
AUTHORIZED STRUCTURAL ENGINEER
20, PHASE I, ENGINEERS ENCLAVE
G.M. ROAD, DEHRADUN-248 001
REG. No: DoH - UK / ASE - III / 2008

Checked and approve.
Gupta

SUBHASH CHANDRA GUPTA
B.E. Civil (Hon's), M. TECH. (Structure)
Reg. No. DOH-UK/ASE-VI/2008
University of Petrolium & Energy Studies

COLS.	EXCAVATION SIZE	FOUNDATION SIZE IN (MM)							REINF. IN FOOTING		COLUMN REINF. FOUNDATION TO F.F.
		L	B	D	l_1	b_1	a	b	nL	nB	
C1,C2, C12,C19, C32,C34, C35	1150 X 1150	1000	1000	300	385	275	230	450	8 NOS. - 10 ϕ	8 NOS. - 10 ϕ	STIRRUPS & LINK 8ϕ@ 75 C/C, 2 NOS. - 16ϕ, 2 NOS. - 12ϕ, 2 NOS. - 16ϕ, 450, 230
C3,C4, C7,C26, C27	1150 X 1150	1000	1000	300	385	385	230	230	8 NOS. - 10 ϕ	8 NOS. - 10 ϕ	STIRRUPS 8ϕ@ 75 C/C, 2 NOS. - 12ϕ, 2 NOS. - 12ϕ, 230, 230
C5,C8, C9,C10, C11,C18, C22,C25	1350 X 1350	1200	1200	300	485	375	230	450	9 NOS. - 10 ϕ	9 NOS. - 10 ϕ	STIRRUPS & LINK 8ϕ@ 75 C/C, 2 NOS. - 16ϕ, 2 NOS. - 12ϕ, 2 NOS. - 16ϕ, 450, 230
C6,C14	1750 X 1750	1600	1600	300	685	575	230	450	12 NOS. - 10ϕ	12 NOS. - 10ϕ	STIRRUPS & LINK 8ϕ@ 75 C/C, 2 NOS. - 16ϕ, 2 NOS. - 12ϕ, 2 NOS. - 16ϕ, 450, 230
C13,C15, C17,C21, C23,C29, C30,C31	1550 X 1550	1400	1400	300	585	475	230	450	10 NOS. - 10ϕ	10 NOS. - 10ϕ	STIRRUPS & LINK 8ϕ@ 75 C/C, 2 NOS. - 16ϕ, 2 NOS. - 12ϕ, 2 NOS. - 16ϕ, 450, 230
C16	1550 X 1550	1400	1400	300	585	442.5	230	515	10 NOS. - 10ϕ	10 NOS. - 10ϕ	STIRRUPS & LINK 8ϕ@ 75 C/C, 2 NOS. - 16ϕ, 2 NOS. - 16ϕ, 2 NOS. - 16ϕ, 515, 230
C20,C28, C33	1150 X 1150	1000	1000	300	385	385	230	230	8 NOS. - 10 ϕ	8 NOS. - 10 ϕ	STIRRUPS 8ϕ@ 75 C/C, 6 NOS. - 12ϕ, 230Ø
C24	1750 X 1750	1600	1600	300	685	567.5	230	465	12 NOS. - 10ϕ	12 NOS. - 10ϕ	STIRRUPS & LINK 8ϕ@ 75 C/C, 2 NOS. - 16ϕ, 2 NOS. - 16ϕ, 2 NOS. - 16ϕ, 465, 230

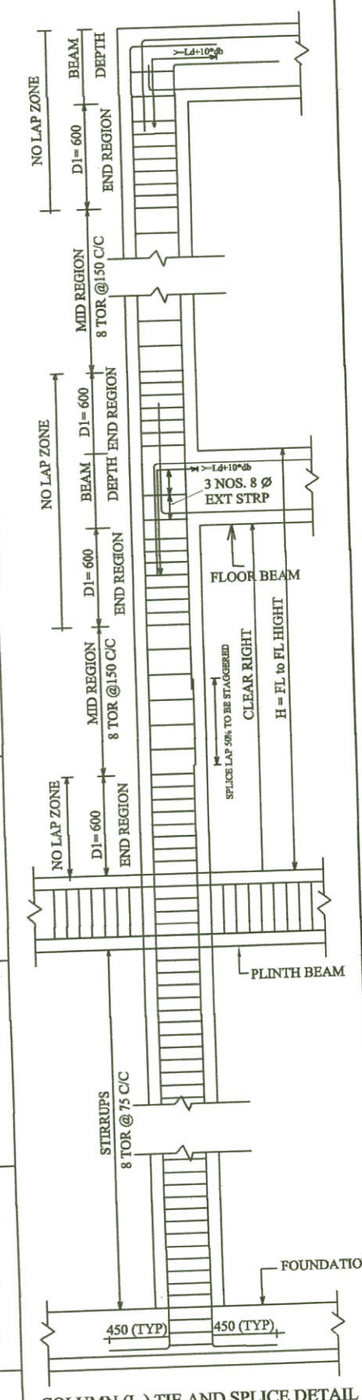

COLUMN (L) TIE AND SPLICE DETAIL

STIRRUPS END REGION 8ϕ @ 75 C/C
MID REGION 8ϕ @ 150 C/C

d_b = DIA OF BAR

	12ϕ	16ϕ	20 ϕ	25 ϕ	28 ϕ
Ld	550	750	950	1150	1300

DEVELOPMENT LENGTH = Ld + 10 *d_b

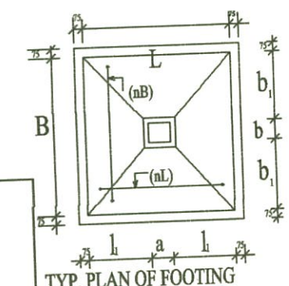

TYP. PLAN OF FOOTING

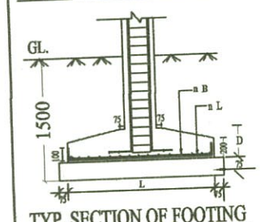

TYP. SECTION OF FOOTING

PROJECT

TYPE - 5 RESIDENCE FOR P.W.D. DEHRADUN.

TITLE

EXCAVATION & COLUMN LAYOUT PLAN & COLUMN DETAILS.

DRAWN	DATE	DRG. NO.	REV. NO.
SEEMA	10.11. 2012	TYPE -5- STR.-2	

CONSULTANT :

SUNEET PRASAD
STRUCTURAL & CONSULTING ENGINEER

Suneet Prasad
SUNEET PRASAD
B. E., M. E. (CIVIL), M I V, F I V
AUTHORIZED STRUCTURAL ENGINEER
20, PHASE-I, ENGINEERS ENCLAVE
G.M.S. ROAD, DEHRADUN-248 001
REG. No: DoH - UK / ASE - III / 2008

Checked and approve

Gupta
SUBHASH CHANDRA GUPTA
B.E. Civil (Hon's), M. TECH. (Structure)
Reg. No. DOH-UK/ASE-VI/2008
University of Petrolium & Energy Studies

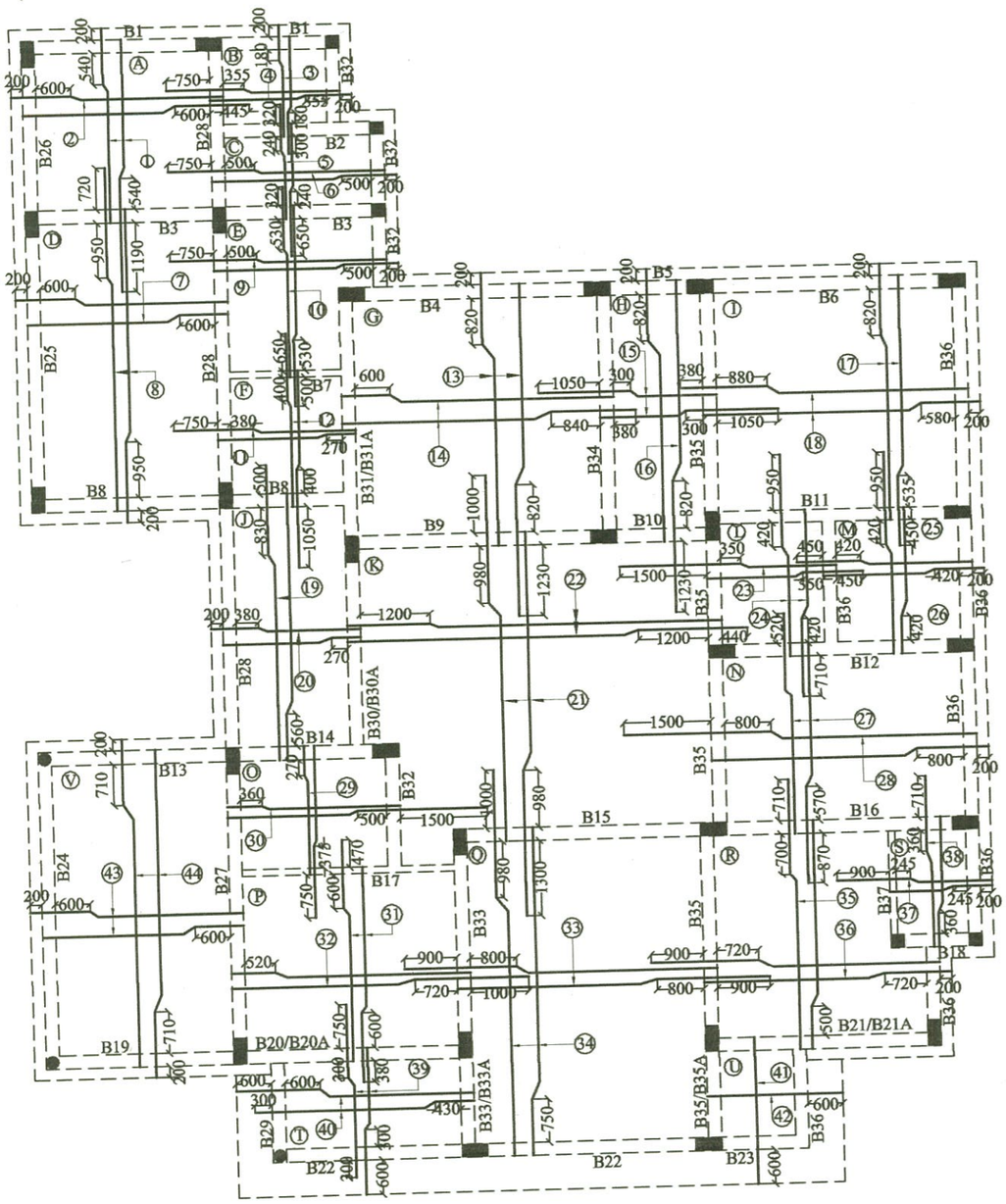

REINF. DETAIL OF ROOF SLAB (WITH BOTTOM BARS)

PANEL	BAR MARK	BAR DIA.	SPACING	DESCRIPTION
Ⓐ (SLAB THICKNESS 125)	1	8 ϕ	175 C/C	BOTTOM MAIN
	2	8 ϕ	200 C/C	BOTTOM DIST.
Ⓑ (SLAB THICKNESS 125)	3	8 ϕ	200 C/C	BOTTOM MAIN
	4	8 ϕ	200 C/C	BOTTOM DIST.
Ⓒ (SLAB THICKNESS 125)	5	8 ϕ	200 C/C	BOTTOM MAIN
	6	8 ϕ	200 C/C	BOTTOM DIST.
Ⓓ (SLAB THICKNESS 125)	7	8 ϕ	150 C/C	BOTTOM MAIN
	8	8 ϕ	200 C/C	BOTTOM DIST.
Ⓔ (SLAB THICKNESS 125)	9	8 ϕ	200 C/C	BOTTOM MAIN
	10	8 ϕ	200 C/C	BOTTOM DIST.
Ⓕ (SLAB THICKNESS 125)	11	8 ϕ	200 C/C	BOTTOM MAIN
	12	8 ϕ	200 C/C	BOTTOM DIST.
Ⓖ (SLAB THICKNESS 125)	13	10 ϕ	200 C/C	BOTTOM MAIN
	14	10 ϕ	200 C/C	BOTTOM DIST.
Ⓗ (SLAB THICKNESS 125)	15	8 ϕ	200 C/C	BOTTOM MAIN
	16	8 ϕ	200 C/C	BOTTOM DIST.
Ⓘ (SLAB THICKNESS 125)	17	8 ϕ	160 C/C	BOTTOM MAIN
	18	8 ϕ	160 C/C	BOTTOM DIST.
Ⓙ (SLAB THICKNESS 125)	19	8 ϕ	200 C/C	BOTTOM MAIN
	20	8 ϕ	200 C/C	BOTTOM DIST.
Ⓚ (SLAB THICKNESS 125)	21	10 ϕ	150 C/C	BOTTOM MAIN
	22	10 ϕ	175 C/C	BOTTOM DIST.
Ⓛ (SLAB THICKNESS 125)	23	8 ϕ	200 C/C	BOTTOM MAIN
	24	8 ϕ	200 C/C	BOTTOM DIST.
Ⓜ (SLAB THICKNESS 125)	25	8 ϕ	200 C/C	BOTTOM MAIN
	26	8 ϕ	200 C/C	BOTTOM DIST.
Ⓝ (SLAB THICKNESS 125)	27	8 ϕ	175 C/C	BOTTOM MAIN
	28	8 ϕ	200 C/C	BOTTOM DIST.
Ⓞ (SLAB THICKNESS 125)	29	8 ϕ	200 C/C	BOTTOM MAIN
	30	8 ϕ	200 C/C	BOTTOM DIST.
Ⓟ (SLAB THICKNESS 125)	31	8 ϕ	175 C/C	BOTTOM MAIN
	32	8 ϕ	175 C/C	BOTTOM DIST.
Ⓠ (SLAB THICKNESS 125)	33	10 ϕ	175 C/C	BOTTOM MAIN
	34	10 ϕ	200 C/C	BOTTOM DIST.
Ⓡ (SLAB THICKNESS 125)	35	8 ϕ	175 C/C	BOTTOM MAIN
	36	8 ϕ	200 C/C	BOTTOM DIST.
Ⓢ (SLAB THICKNESS 125)(SUNKIN)	37	8 ϕ	200 C/C	BOTTOM MAIN
	38	8 ϕ	200 C/C	BOTTOM DIST.
Ⓣ (SLAB THICKNESS 125)	39	8 ϕ	200 C/C	BOTTOM MAIN
	40	8 ϕ	200 C/C	BOTTOM DIST.
Ⓤ (SLAB THICKNESS 115)	41	8 ϕ	200 C/C	BOTTOM MAIN
	42	8 ϕ	200 C/C	BOTTOM DIST.
Ⓥ (SLAB THICKNESS 125)	43	8 ϕ	150 C/C	BOTTOM MAIN
	44	8 ϕ	200 C/C	BOTTOM DIST.

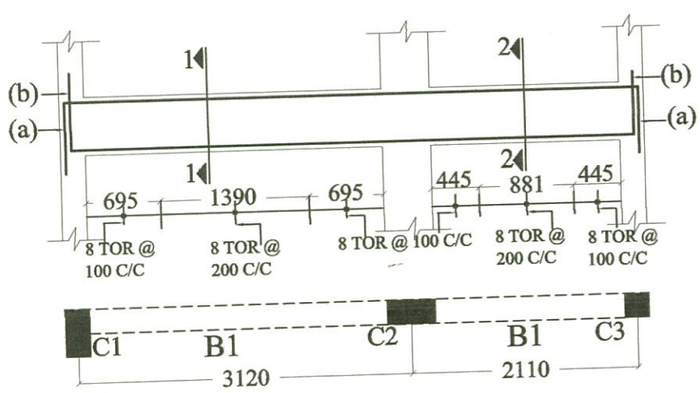

(a) = 2 nos.- 16 tor
(b) = 2 nos.- 16 tor

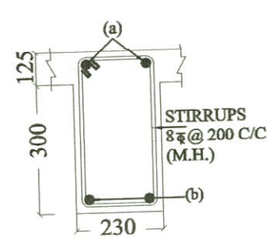

SECTION 1-1

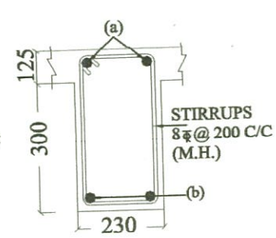

SECTION 2-2

PROJECT

TYPE - 5 RESIDENCE FOR P.W.D. DEHRADUN.

TITLE

REINF. DETAIL OF ROOF SLAB & BEAMS.

DRAWN	DATE	DRG. NO.	REV. NO.
SEEMA	10.11. 2012	TYPE -5- STR.-3	

CONSULTANT :

SUNEET PRASAD
STRUCTURAL & CONSULTING ENGINEER

Suneet Prasad

SUNEET PRASAD
B. E., M. E. (CIVIL), M I V, F I V
AUTHORIZED STRUCTURAL ENGINEER
20, PHASE-I, ENGINEERS ENCLAVE
G.M.S. ROAD, DEHRADUN-248 001
REG. No: DoH - UK / ASE - III / 2008

Checked and approve

Gupta

SUBHASH CHANDRA GUPTA
B.E. Civil (Hon's), M. TECH. (Structure)
Reg. No. DOH-UK/ASE-VI/2008
University of Petrolium & Energy Studies

ALL LINTEL BEAMS TO HAVE BBEARING OF 230 ON EITHER SIDE OPEING

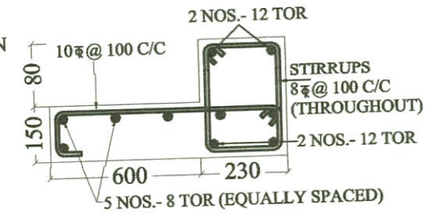

TYPICAL BEAM/ SUNSHADE DETAIL FOR OPENING UPTO 2000

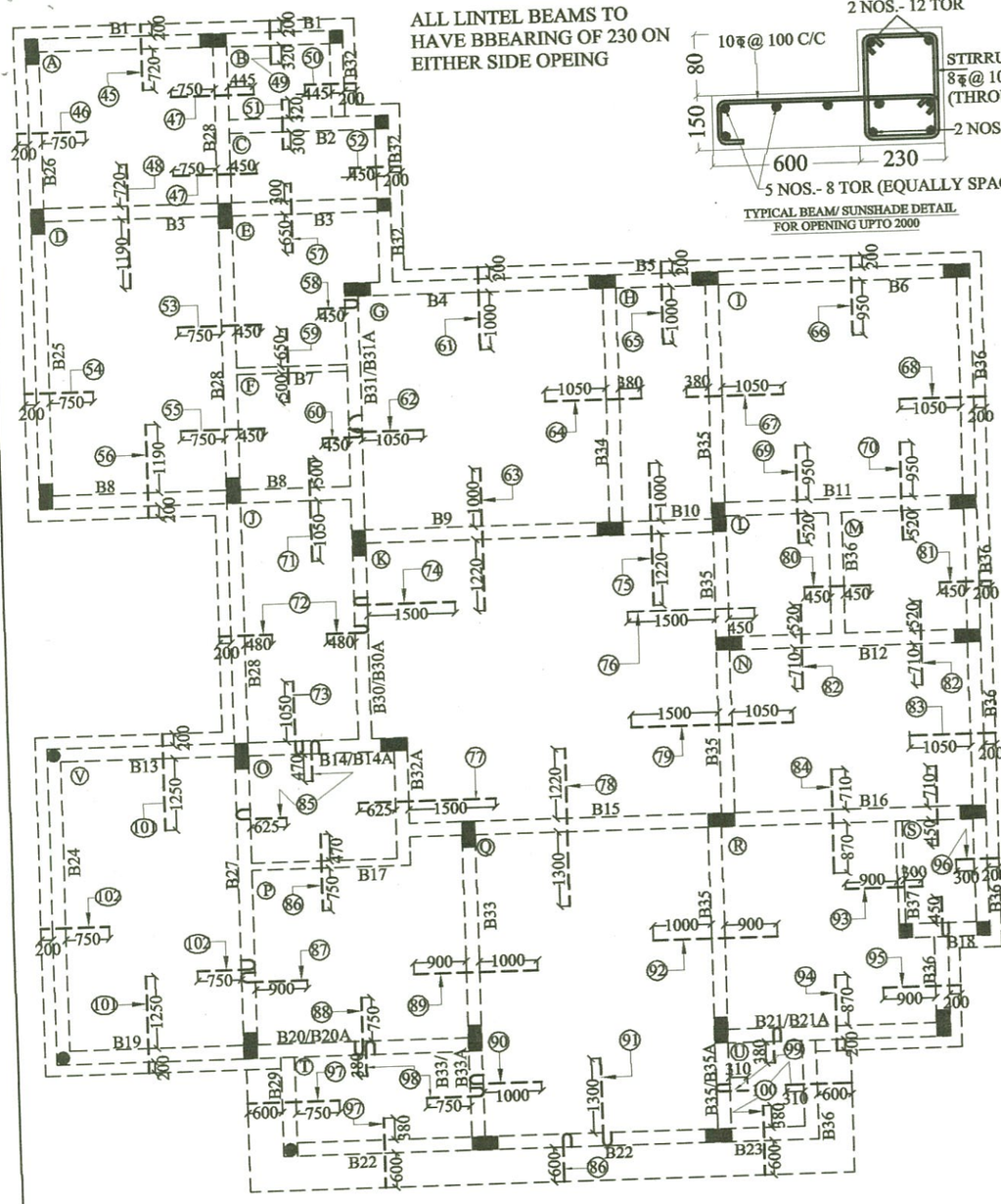

REINF. DETAIL OF ROOF SLAB (WITH TOP BARS)

TOP DIST. 8 TOR @ 200 C/C WHERE EVER REQUIRED.

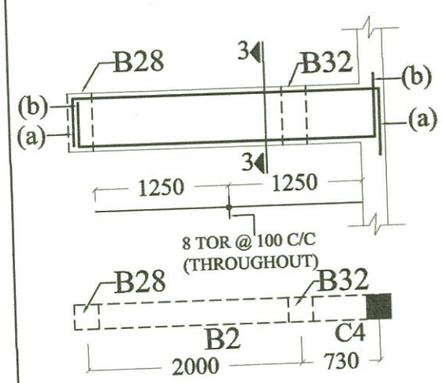

(a) = 2 nos.- 12 tor
(b) = 2 nos.- 16 tor

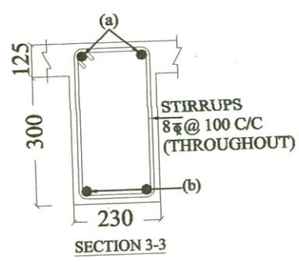

SECTION 3-3

BAR MARK	BAR DIA.	SPACING	DESCRIPTION
45	8 ϕ	350 C/C	TOP MAIN
46	8 ϕ	400 C/C	TOP MAIN
47	8 ϕ	400 C/C	TOP MAIN
48	8 ϕ	350 C/C	TOP MAIN
49	8 ϕ	400 C/C	TOP MAIN
50	8 ϕ	400 C/C	TOP MAIN
51	8 ϕ	400 C/C	TOP MAIN
52	8 ϕ	400 C/C	TOP MAIN
53	8 ϕ	300 C/C	TOP MAIN
54	8 ϕ	300 C/C	TOP MAIN
55	8 ϕ	300 C/C	TOP MAIN
56	8 ϕ	400 C/C	TOP MAIN
57	8 ϕ	400 C/C	TOP MAIN
58	8 ϕ	400 C/C	TOP MAIN
59	8 ϕ	400 C/C	TOP MAIN
60	8 ϕ	400 C/C	TOP MAIN
61	10 ϕ	400 C/C	TOP MAIN
62	10 ϕ	400 C/C	TOP MAIN
63	8 ϕ	300 C/C	TOP MAIN
64	10 ϕ	400 C/C	TOP MAIN
65	8 ϕ	400 C/C	TOP MAIN
66	8 ϕ	320 C/C	TOP MAIN
67	8 ϕ	320 C/C	TOP MAIN
68	8 ϕ	320 C/C	TOP MAIN
69	8 ϕ	320 C/C	TOP MAIN
70	8 ϕ	320 C/C	TOP MAIN
71	8 ϕ	300 C/C	TOP MAIN
72	8 ϕ	300 C/C	TOP MAIN
73	8 ϕ	300 C/C	TOP MAIN
74	10 ϕ	350 C/C	TOP MAIN
75	10 ϕ	300 C/C	TOP MAIN
76	10 ϕ	350 C/C	TOP MAIN
77	10 ϕ	350 C/C	TOP MAIN
78	8 ϕ	300 C/C	TOP MAIN
79	10 ϕ	300 C/C	TOP MAIN
80	8 ϕ	400 C/C	TOP MAIN
81	8 ϕ	400 C/C	TOP MAIN
82	8 ϕ	350 C/C	TOP MAIN
83	8 ϕ	400 C/C	TOP MAIN
84	8 ϕ	350 C/C	TOP MAIN
85	8 ϕ	450 C/C	TOP MAIN
86	8 ϕ	350 C/C	TOP MAIN
87	8 ϕ	350 C/C	TOP MAIN
88	8 ϕ	350 C/C	TOP MAIN
89	10 ϕ	350 C/C	TOP MAIN
90	10 ϕ	350 C/C	TOP MAIN
91	10 ϕ	400 C/C	TOP MAIN

BAR MARK	BAR DIA.	SPACING	DESCRIPTION
92	10 ϕ	350 C/C	TOP MAIN
93	8 ϕ	400 C/C	TOP MAIN
94	8 ϕ	350 C/C	TOP MAIN
95	8 ϕ	400 C/C	TOP MAIN
96	8 ϕ	400 C/C	TOP MAIN
97	10 ϕ	150 C/C	TOP MAIN
98	8 ϕ	400 C/C	TOP MAIN
99	8 ϕ	400 C/C	TOP MAIN
100	10 ϕ	150 C/C	TOP MAIN
101	8 ϕ	400 C/C	TOP MAIN
102	8 ϕ	350 C/C	TOP MAIN

PROJECT

TYPE - 5 RESIDENCE FOR P.W.D. DEHRADUN.

TITLE

REINF. DETAIL OF ROOF SLAB & BEAMS.

DRAWN	DATE	DRG. NO.	REV. NO.
SEEMA	10.11. 2012	TYPE -5- STR.-4	

CONSULTANT :

SUNEET PRASAD
STRUCTURAL & CONSULTING ENGINEER

Suneet Prasad
SUNEET PRASAD
B. E., M. E. (CIVIL), M I V, F I V
AUTHORIZED STRUCTURAL ENGINEER
20, PHASE-I, ENGINEERS ENCLAVE
G.M.S. ROAD, DEHRADUN-248 001
REG. No: DoH - UK / ASE - III / 2008

Checked and approve
Gupta
SUBHASH CHANDRA GUPTA
B.E. Civil (Hon's), M. TECH. (Structure)
Reg. No. DOH-UK/ASE-VI/2008
University of Petrolium & Energy Stu

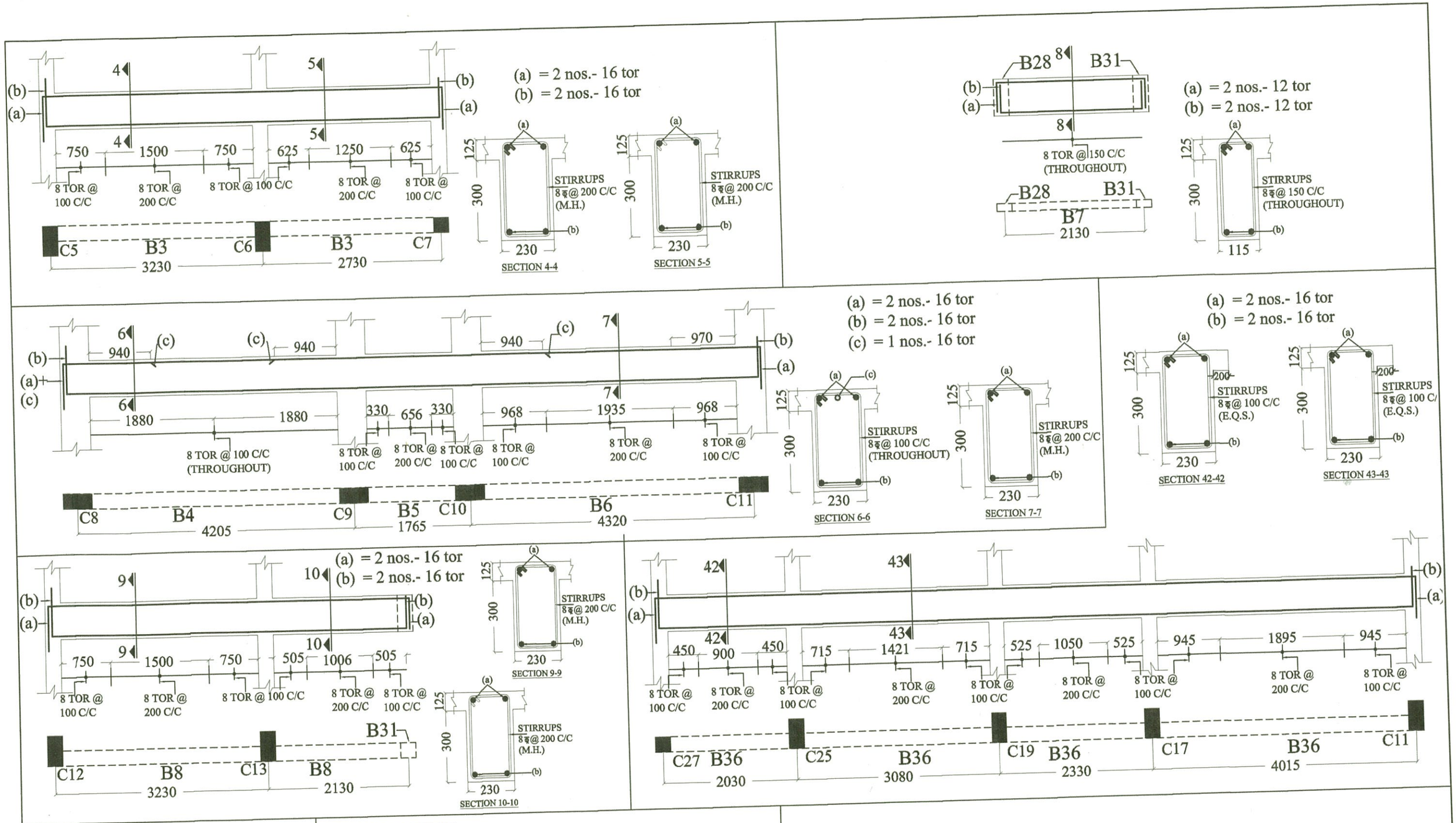

PROJECT

TYPE - 5 RESIDENCE FOR P.W.D. DEHRADUN.

TITLE

REINF. DETAIL OF ROOF BEAMS.

DRAWN	DATE	DRG. NO.	REV. NO.
SEEMA	10.11. 2012	TYPE -5- STR.-5	

CONSULTANT :

SUNEET PRASAD
STRUCTURAL & CONSULTING ENGINEER

Suneet Prasad

SUNEET PRASAD
B. E., M. E. (CIVIL), M.I.V.S. F.I.V.
AUTHORIZED STRUCTURAL ENGINEER
20, PHASE-II, ENGINEERS ENCLAVE
G.M.S. ROAD, DEHRADUN-248 001
REG. No: DoH - Uk / ASE - III / 2008

Checked and approve

SUBHASH CHANDRA GUPTA
B.E. Civil (Hon's), M. TECH. (Structure)
Reg. No. DOH-UK/ASE-VI/2008
University of Petrolium & Energy Studies

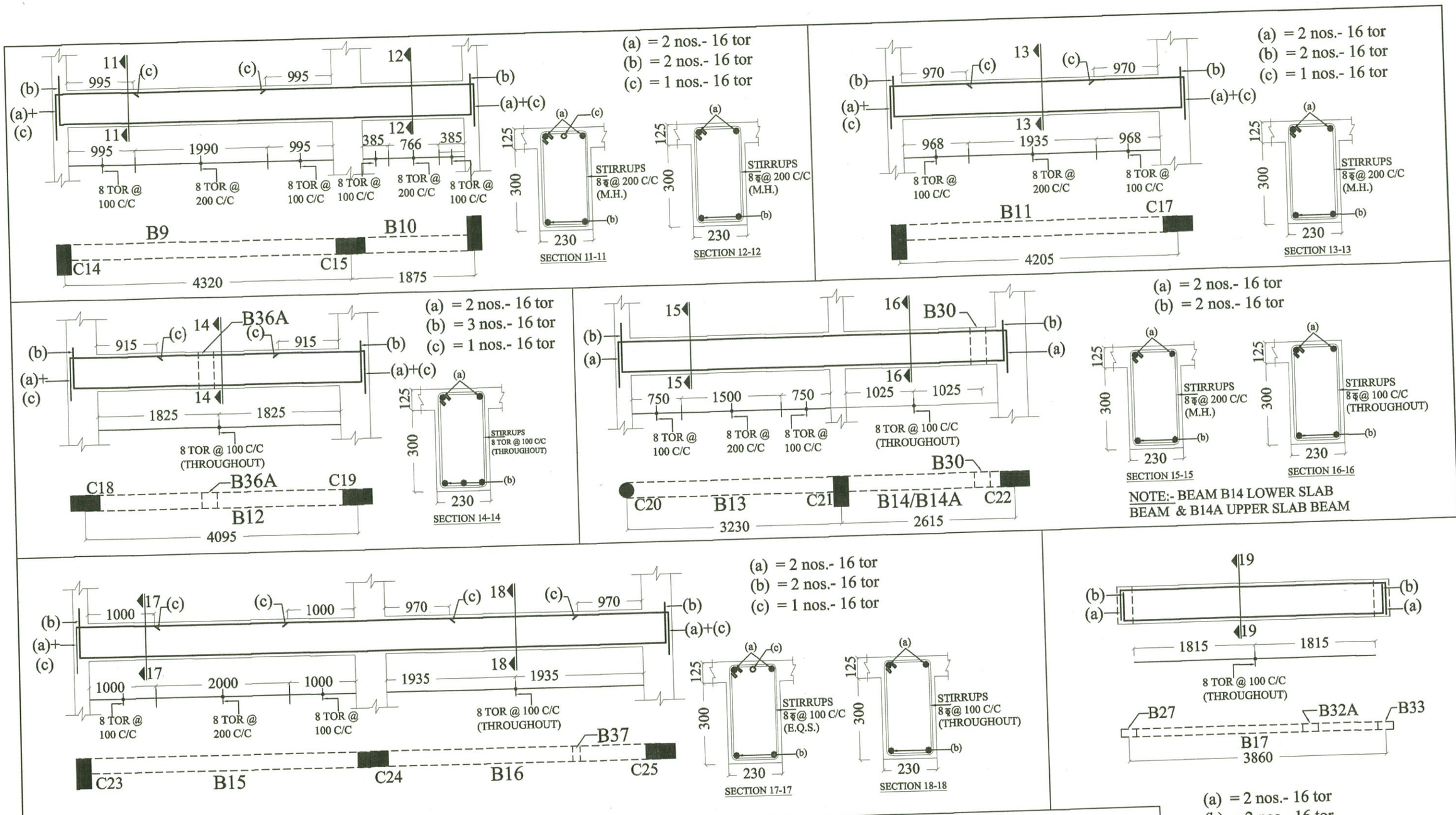

PROJECT

TYPE - 5 RESIDENCE FOR P.W.D. DEHRADUN.

TITLE

REINF. DETAIL OF ROOF BEAMS.

DRAWN	DATE	DRG. NO.	REV. NO.
SEEMA	10.11. 2012	TYPE -5- STR.-6	

CONSULTANT :

SUNEET PRASAD
STRUCTURAL & CONSULTING ENGINEER

Suneet Prasad

SUNEET PRASAD
B. E., M. E. (CIVIL), M I V, F I V
AUTHORIZED STRUCTURAL ENGINEER
20, PHASE-I, ENGINEERS ENCLAVE
G.M.S. ROAD, DEHRADUN-248 001
REG. No: DoH - UK / ASE - III / 2008

Checked and approve

SUBHASH CHANDRA GUPTA
B.E. Civil (Hon's), M. TECH. (Structure)
Reg. No. DOH-UK/ASE-VI/2008
University of Petrolium & Energy Studies

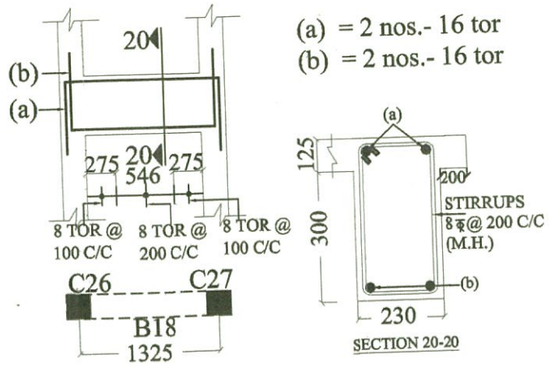

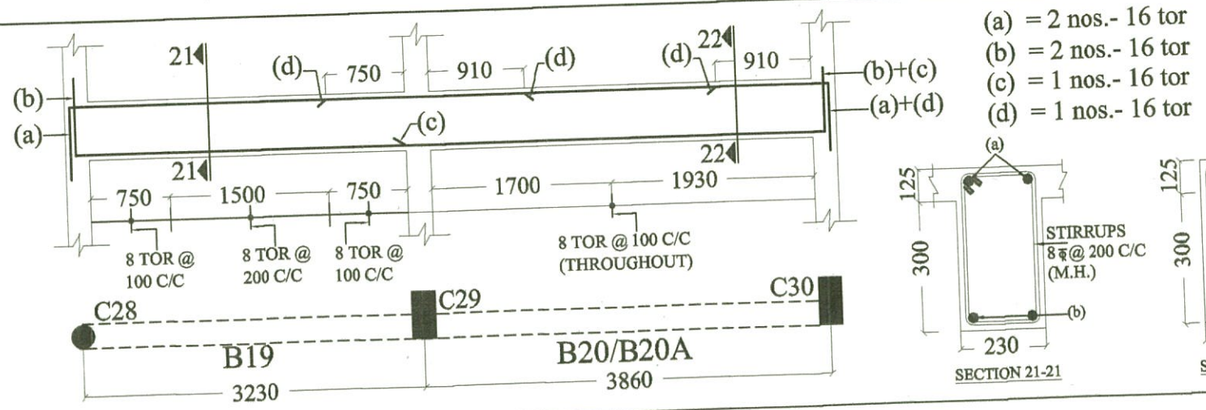

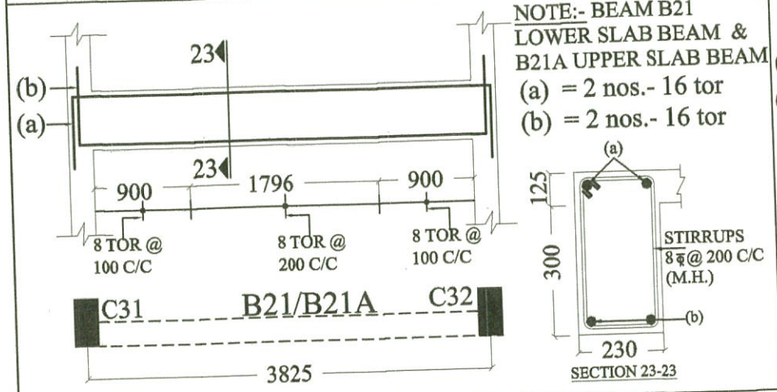

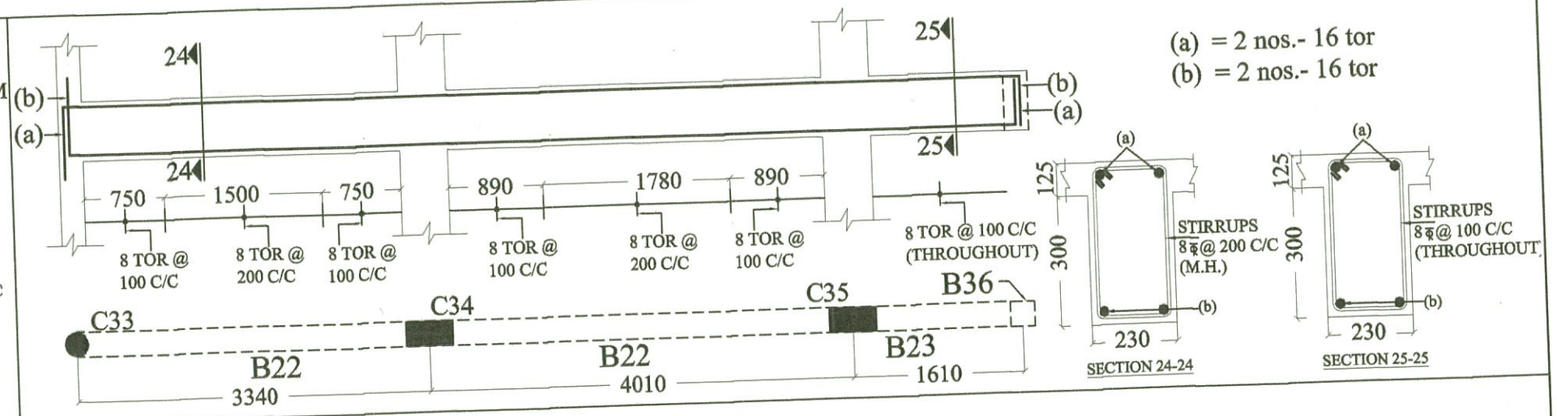

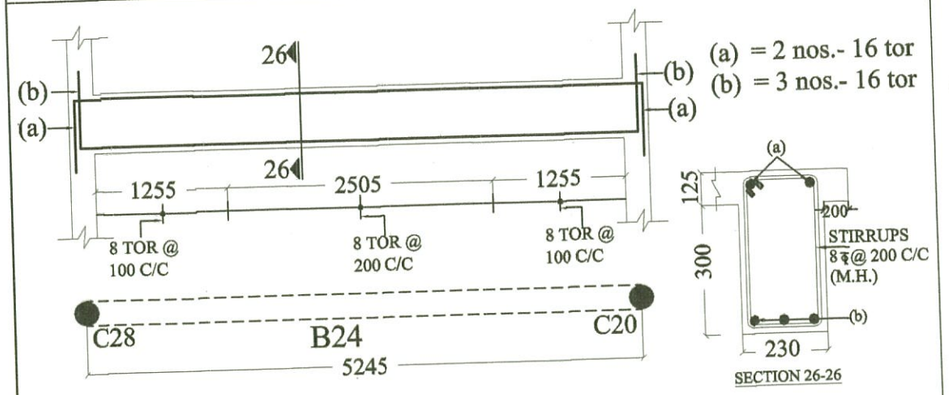

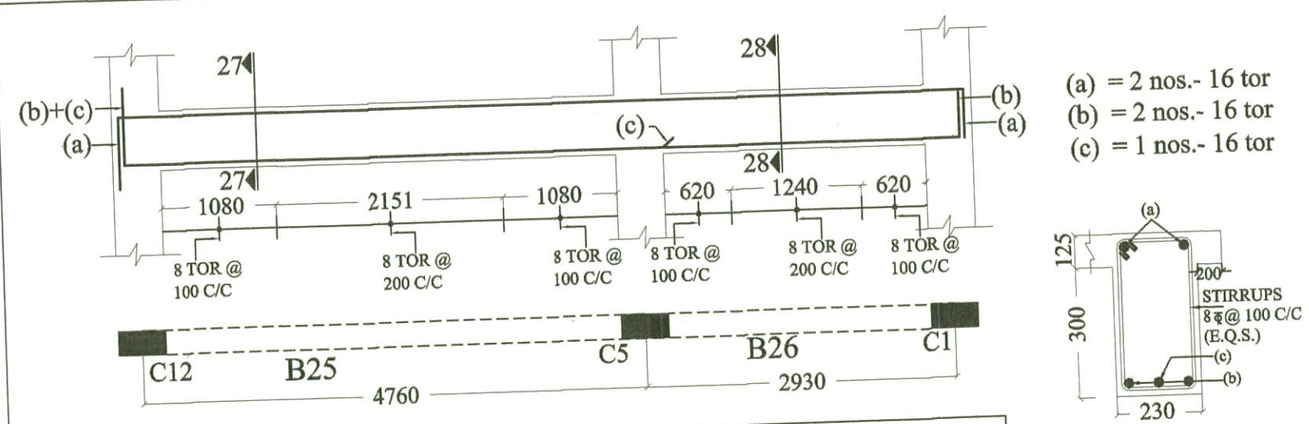

PROJECT

TYPE - 5 RESIDENCE FOR P.W.D. DEHRADUN.

TITLE

REINF. DETAIL OF ROOF BEAMS.

DRAWN	DATE	DRG. NO.	REV. NO.
SEEMA	10.11. 2012	TYPE -5- STR.-7	

CONSULTANT :

SUNEET PRASAD
STRUCTURAL & CONSULTING ENGINEER

Suneet Prasad

SUNEET PRASAD
B. E., M. E. (CIVIL), M I V, F I V
AUTHORIZED STRUCTURAL ENGINEER
20, PHASE-I, ENGINEERS ENCLAVE
G.M.S. ROAD, DEHRADUN-248 001
REG. No: DoH - UK / ASE - III / 2008

Checked and approve

Gupta

SUBHASH CHANDRA GUPTA
B.E. Civil (Hon's), M. TECH. (Structure)
Reg. No. DOH-UK/ASE-VI/2008
University of Petrolium & Energy Studies

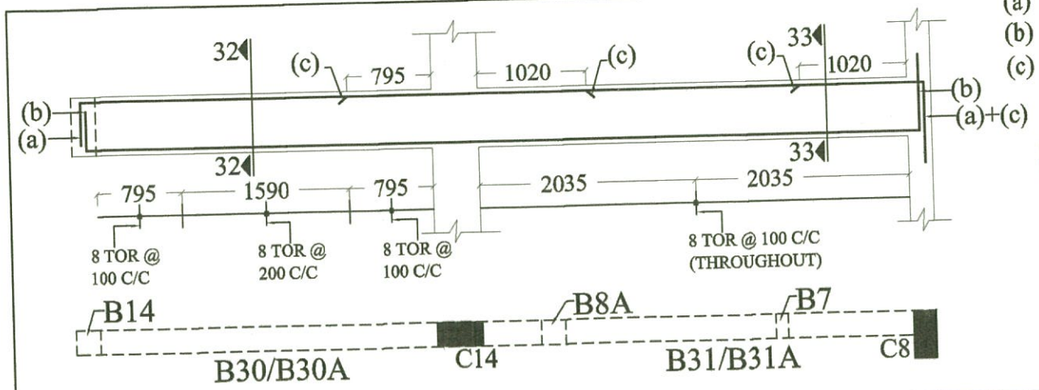

(a) = 2 nos.- 16 tor
(b) = 2 nos.- 16 tor
(c) = 1 nos.- 16 tor

NOTE:- BEAM B30, B31 LOWER SLAB BEAM & B30A, B31A UPPER SLAB BEAM

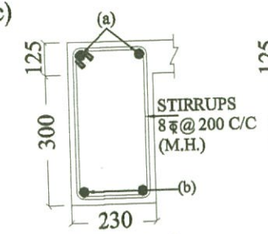

SECTION 32-32

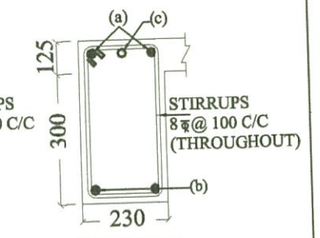

SECTION 33-33

(a) = 2 nos.- 16 tor
(b) = 2 nos.- 16 tor
(c) = 1 nos.- 16 tor
(d) = 1 nos.- 16 tor

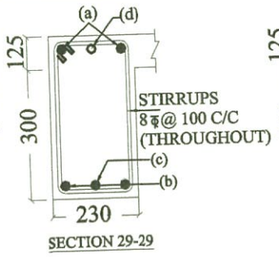

SECTION 29-29

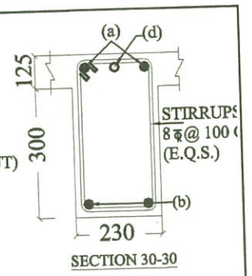

SECTION 30-30

NOTE:- BEAM B27 LOWER SLAB BEAM & B27A UPPER SLAB BEAM

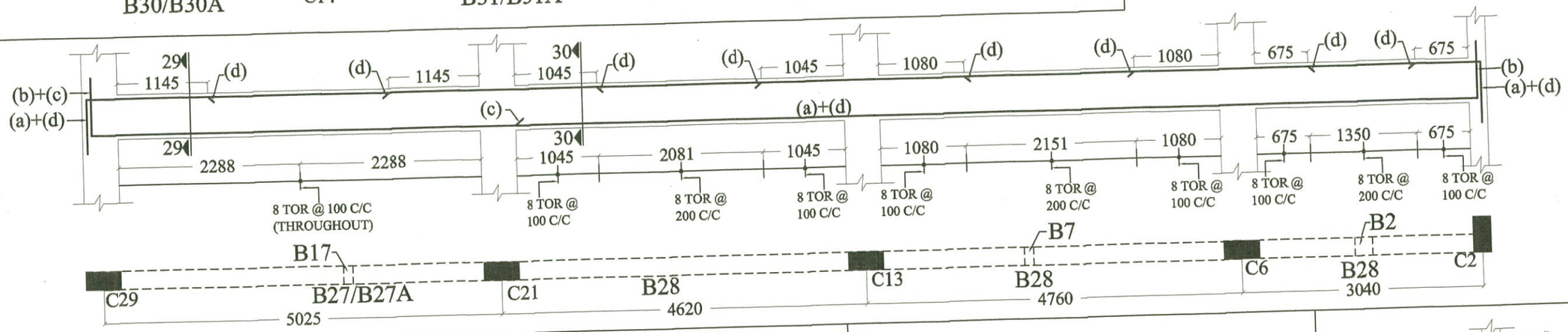

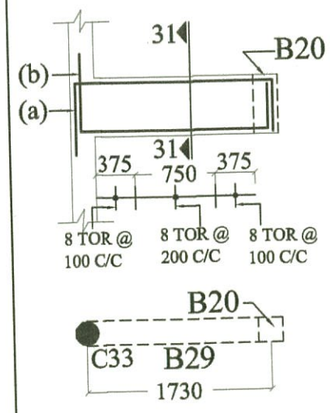

(a) = 2 nos.- 16 tor
(b) = 2 nos.- 16 tor

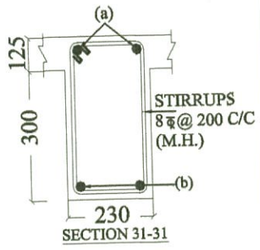

SECTION 31-31

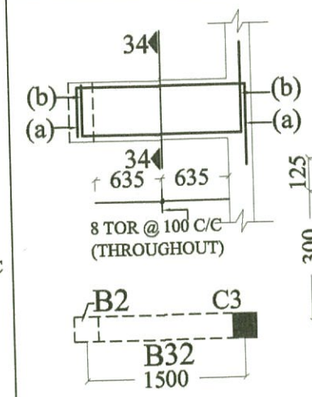

(a) = 2 nos.- 16 tor
(b) = 2 nos.- 16 tor

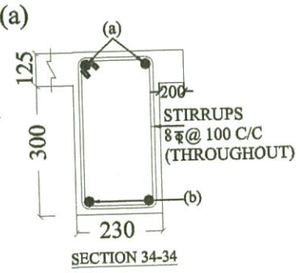

SECTION 34-34

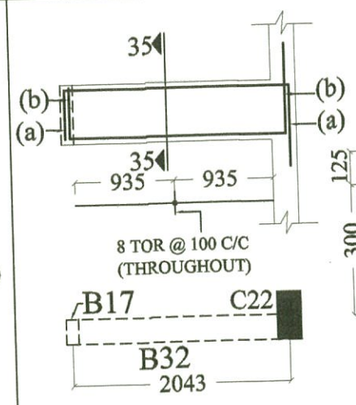

(a) = 2 nos.- 16 tor
(b) = 2 nos.- 16 tor

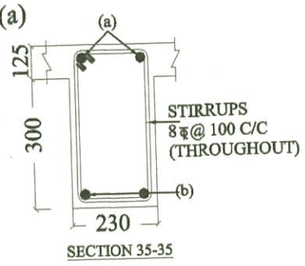

SECTION 35-35

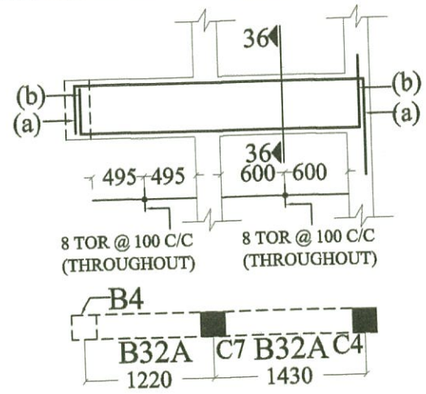

(a) = 2 nos.- 16 tor
(b) = 2 nos.- 16 tor

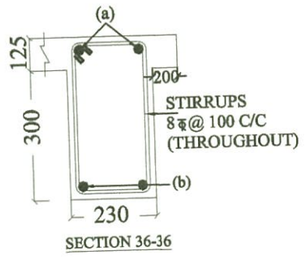

SECTION 36-36

PROJECT

TYPE - 5 RESIDENCE FOR P.W.D. DEHRADUN.

TITLE

REINF. DETAIL OF ROOF BEAMS.

DRAWN	DATE	DRG. NO.	REV. NO.
SEEMA	10.11. 2012	TYPE -5- STR.-8	

CONSULTANT :

SUNEET PRASAD
STRUCTURAL & CONSULTING ENGINEER

Suneet Prasad

SUNEET PRASAD
B. E., M. E. (CIVIL), M I V, F I V
AUTHORIZED STRUCTURAL ENGINEER
20, PHASE-I, ENGINEERS ENCLAVE
G.M.S. ROAD, DEHRADUN-248 001
REG. No: DoH - UK / ASE - III / 2008

Checked and approve

SUBHASH CHANDRA GUPTA
B.E. Civil (Hon's), M. TECH. (Structure)
Reg. No. DOH-UK/ASE-VI/2008
University of Petrolium & Energy Studies

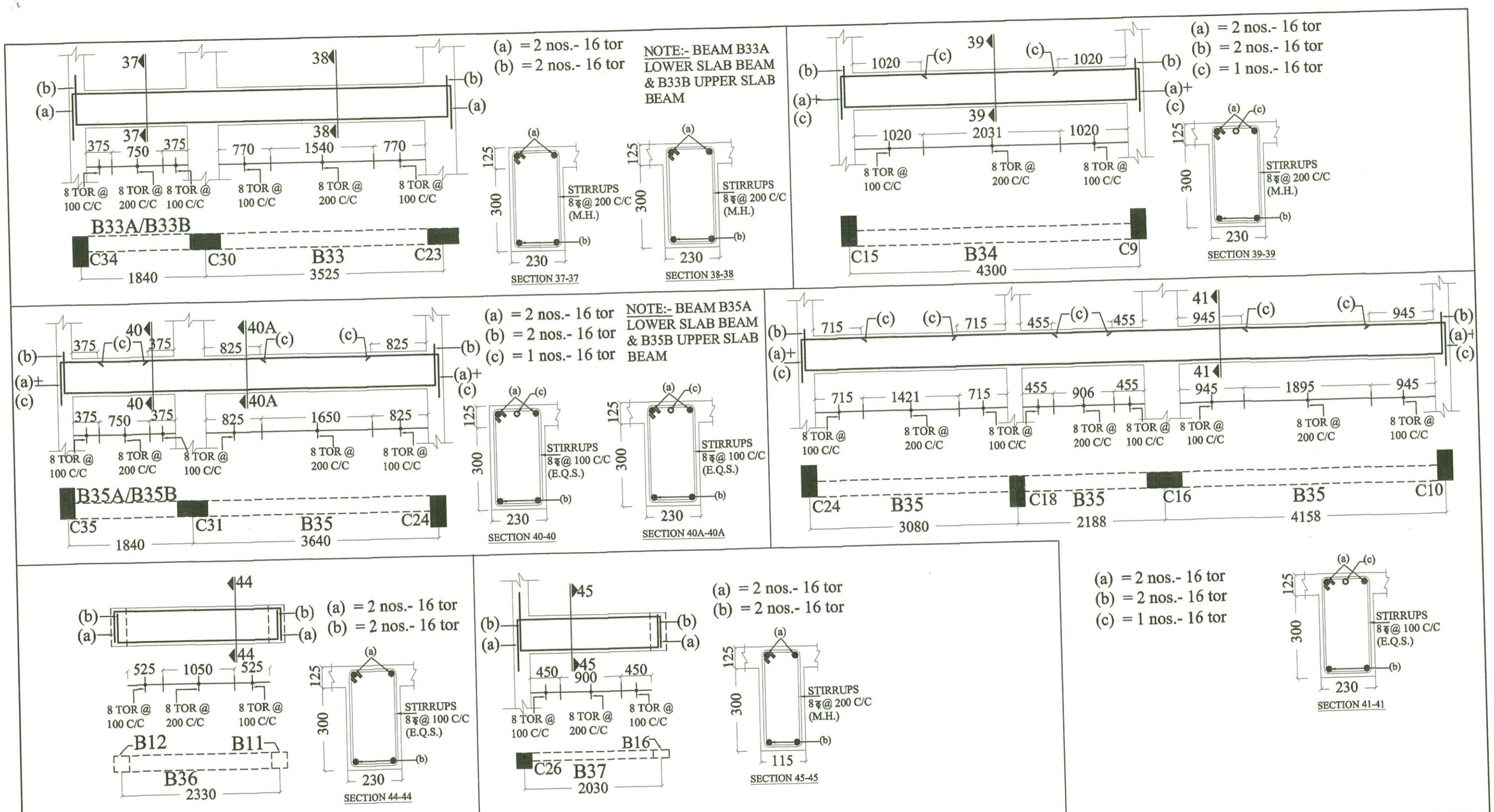

PROJECT

TYPE - 5 RESIDENCE FOR P.W.D. DEHRADUN.

TITLE

REINF. DETAIL OF ROOF BEAMS.

DRAWN	DATE	DRG. NO.	REV. NO.
SEEMA	10.11. 2012	TYPE -5- STR.-9	

CONSULTANT :

SUNEET PRASAD
STRUCTURAL & CONSULTING ENGINEER

Suneet Prasad

SUNEET PRASAD
B. E., M. E. (CIVIL), M I V, F I V
AUTHORIZED STRUCTURAL ENGINEER
20, PHASE-I, ENGINEERS ENCLAVE
G.M.S. ROAD, DEHRADUN-248 001
REG. No: DoH - UK / ASE - III / 2008

Checked and approve

SUBHASH CHANDRA GUPTA
B.E. Civil (Hon's), M. TECH. (Structure)
Reg. No. DOH-UK/ASE-VI/2008
University of Petrolium & Energy Studies

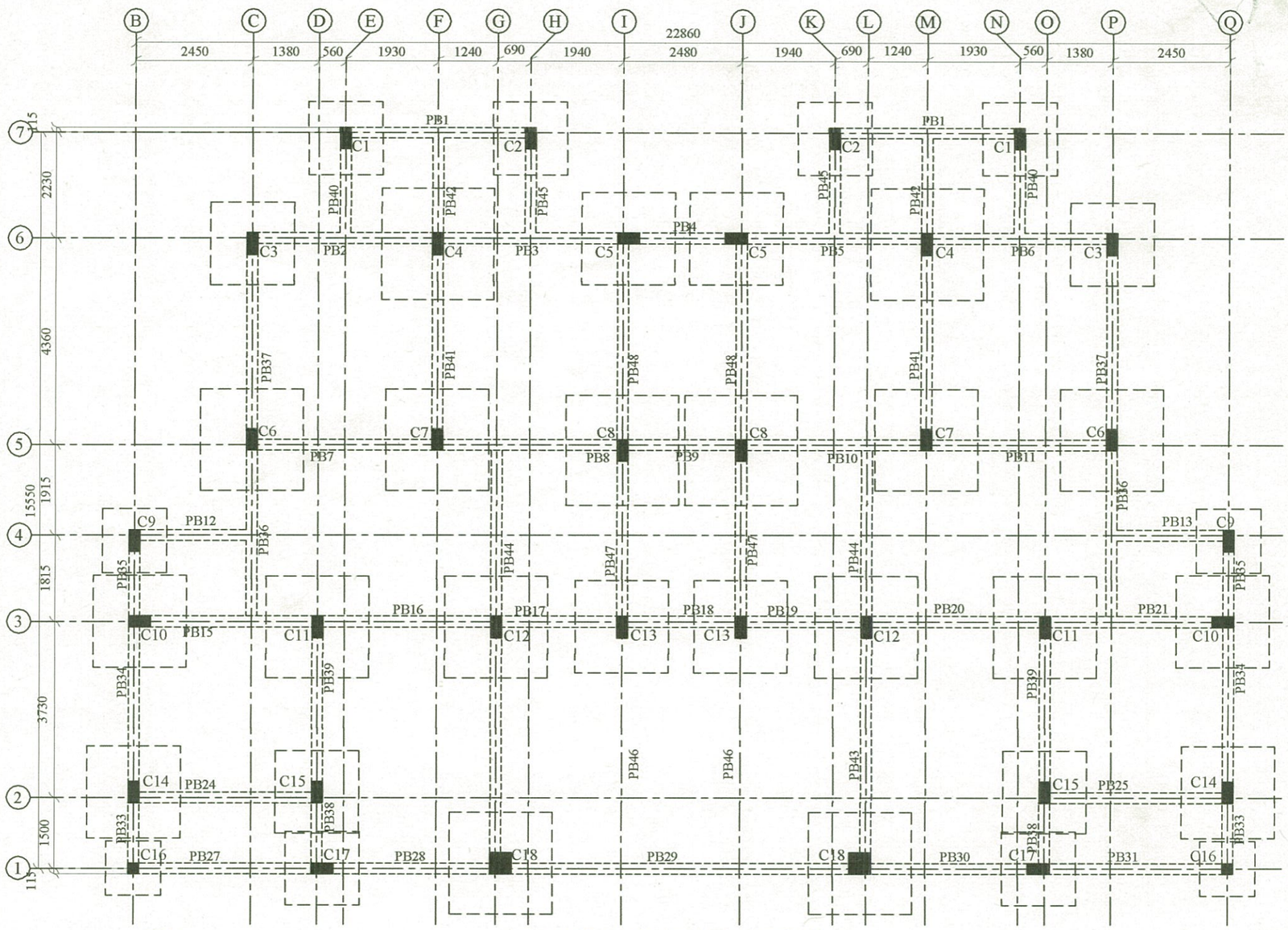

EXCAVATION & COLUMN LAYOUT PLAN

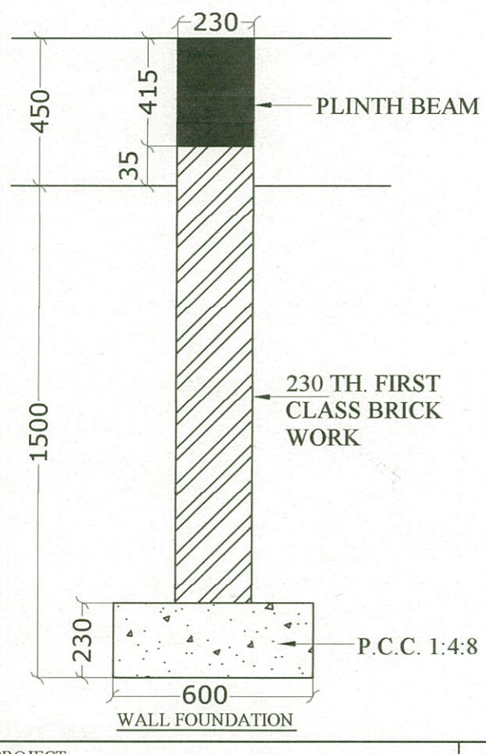

WALL FOUNDATION

NOTES

1. READ THIS DRAWING IN CONJUCTION WITH RELEVANT ARCH. DRAWING.
2. ALL DIMENSIONS IN MM.
3. M20 GRADE CONCRETE SHALL BE USED UNLESS NOTED OTHERWISE.
4. REINFORCEMENT BAR TO BE USED SHALL BE HIGH YIELD STRENGTH DEFORMED BAR STRESS 415N/mm^2
5. ANY LAP OF BAR SHALL NOT BE LESS THAN 50xDIA OF LARGER DIA.
6. CLEAR COVER TO MAIN REINF.SHALL BE AS FOLLOWS

FOOTINGS	-	50MM.
WALL	-	25MM.
COLUMN	-	40MM.
BEAM	-	25MM.
SLAB	-	20MM.

7. ALL STEEL SHOULD BE FREE OF RUST, SCALE ,GREASE, DIRT, OIL, ETC.
8. ALL CONCRETE TO BE MECHANICALLY MIXED AND VIBRATED
9. ALL CONCRETE TO BE PLACED AGAINST STEEL OR WATER ROOF PLY. PUCCA SHUTTERING
10. NET ALLOWABLE BEARING CAPACITY OF SOIL IS TAKEN AS 10.00 TONS / SQM. AT 1.50 M. DEPTH BELOW GROUND LEVEL.
11. BUILDING IS DESIGN FOR GROUND + 1 FLOORS.
12. BUILDING IS DESIGN FOR E.Q. ZONE IV.

PROJECT

TYPE - 4 RESIDENCE FOR P.W.D. DEHRADUN.

TITLE

EXCAVATION & COLUMN LAYOUT PLAN & COLUMN DETAILS.

DRAWN	DATE	DRG. NO.	REV. NO.
SEEMA	30.08. 2012	TYPE -4- STR.-1	1

CONSULTANT :

SUNEET PRASAD
STRUCTURAL &
CONSULTING ENGINEER

Suneet Prasad

SUNEET PRASAD
B. E., M. E. (CIVIL), M I V, F I V
AUTHORIZED STRUCTURAL ENGINEER
20, PHASE-I, ENGINEERS ENCLAVE
G.M.S. ROAD, DEHRADUN-248 001
REG. No: DoH - UK / ASE - III / 2008

Checked and approve

SUBHASH CHANDRA GUPTA
B.E. Civil (Hon's), M. TECH. (Structure)
Reg. No. DOH-UK/ASE-VI/2008
University of Petrolium & Energy Studies

COLS.	EXCAVATION SIZE	FOUNDATION SIZE IN (MM)							REINF. IN FOOTING		COLUMN REINF.
		L	B	D	l_1	b_1	a	b	nL	nB	
C1,C2,	1550 X 1550	1400	1400	300	585	470	230	460	10 NOS. - 10 ϕ	10 NOS. - 10 ϕ	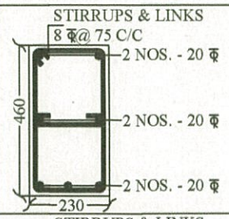
C3	1750 X 1750	1600	1600	300	685	570	230	460	12 NOS. - 10 ϕ	12 NOS. - 10 ϕ	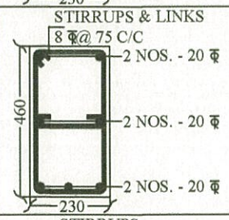
C4,C8	2350 X 2350	2200	2200	380	985	870	230	460	17 NOS. - 12 ϕ	17 NOS. - 12 ϕ	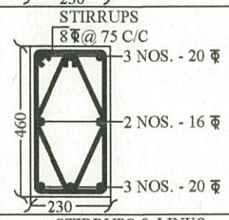
C5	1950 X 1950	1800	1800	300	785	670	230	460	12 NOS. - 12 ϕ	12 NOS. - 12 ϕ	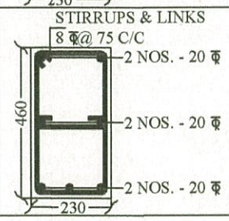

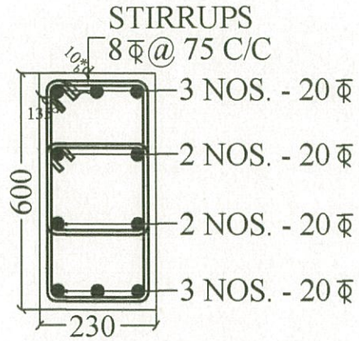

TYP. STIRRUP & LINK DETAIL

D = DIA OF STIRRUP

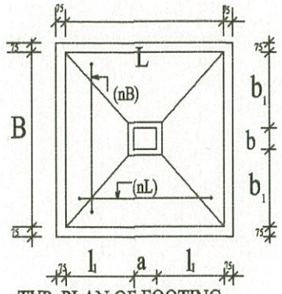

TYP. PLAN OF FOOTING

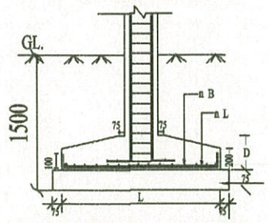

TYP. SECTION OF FOOTING

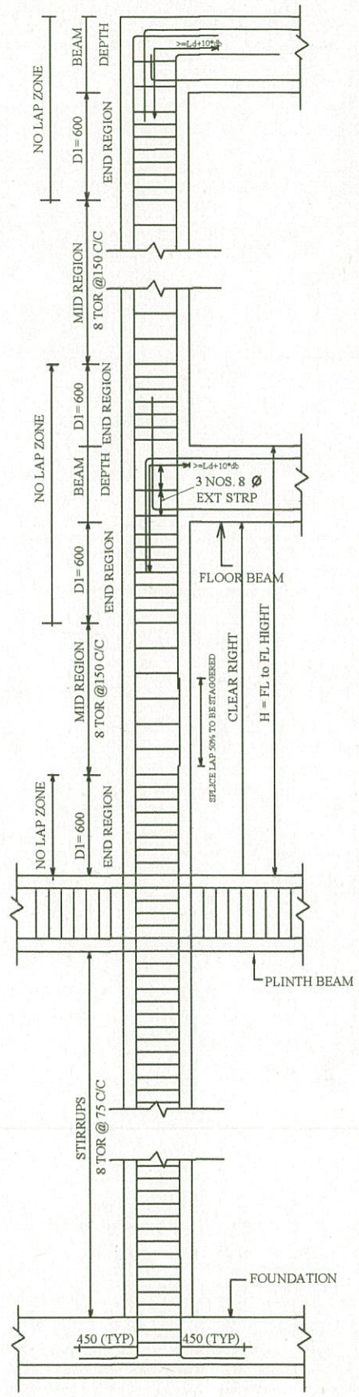

COLUMN (L) TIE AND SPLICE DETAIL

STIRRUPS END REGION 8 ϕ@ 75 C/C
MID REGION 8 ϕ@ 150 C/C

d_b = DIA OF BAR

	12 ϕ	16 ϕ	20 ϕ	25 ϕ	28 ϕ
Ld	550	750	950	1150	1300

DEVELOPMENT LENGTH = Ld + 10 * d_b

PROJECT

TYPE - 4 RESIDENCE FOR P.W.D. DEHRADUN.

TITLE

EXCAVATION & COLUMN LAYOUT PLAN & COLUMN DETAILS.

DRAWN	DATE	DRG. NO.	REV. NO.
SEEMA	03.10. 2012	TYPE -4- STR.-2	1

CONSULTANT :

SUNEET PRASAD
STRUCTURAL & CONSULTING ENGINEER

Suneet Prasad
SUNEET PRASAD
B. E., M. E. (CIVIL), M I V, F I V
AUTHORIZED STRUCTURAL ENGINEER
20, PHASE-I, ENGINEERS ENCLAVE
G.M.S. ROAD, DEHRADUN-248 001
REG. No: DoH - UK / ASE - III / 2008

Checked and approve

SUBHASH CHANDRA GUPTA
B.E. Civil (Hon's), M. TECH. (Structure)
Reg. No. DOH-UK/ASE-VI/2008
University of Petrolium & Energy Studies

COLS.	EXCAVATION SIZE	FOUNDATION SIZE IN (MM)							REINF. IN FOOTING		COLUMN REINF.
		L	B	D	l_1	b_1	a	b	nL	nB	
C6,C7, C12	2150 X 2150	2000	2000	380	885	770	230	460	13 NOS. - 12 ϕ	13 NOS. - 12 ϕ	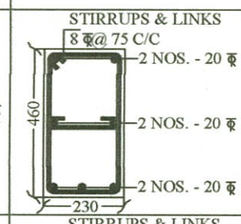
C9	1350 X 1350	1200	1200	300	485	370	230	460	7 NOS. - 10 ϕ	7 NOS. - 10 ϕ	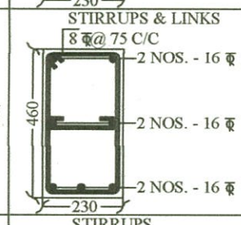
C10,C13, C14	1950 X 1950	1800	1800	300	785	670	230	460	12 NOS. - 12 ϕ	12 NOS. - 12 ϕ	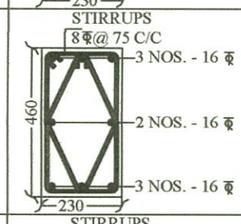
C11	2150 X 2150	2000	2000	380	885	770	230	460	13 NOS. - 12 ϕ	13 NOS. - 12 ϕ	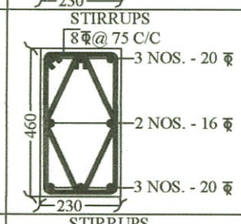
C15	1750 X 1750	1600	1600	300	685	570	230	460	12 NOS. - 10 ϕ	12 NOS. - 10 ϕ	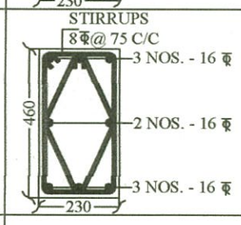
C16	1150 X 1150	1000	1000	300	385	270	230	460	8 NOS. - 10 ϕ	8 NOS. - 10 ϕ	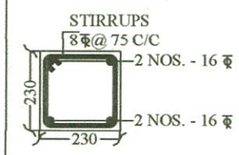
C17	1550 X 1550	1400	1400	300	585	470	230	460	10 NOS. - 10 ϕ	10 NOS. - 10 ϕ	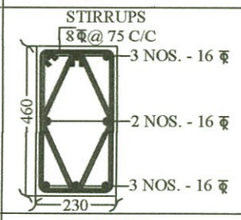
C18	2150 X 2150	2000	2000	380	885	770	230	460	13 NOS. - 12 ϕ	13 NOS. - 12 ϕ	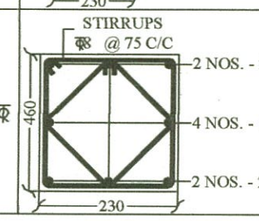

PROJECT

TYPE - 4 RESIDENCE FOR P.W.D. DEHRADUN.

TITLE

EXCAVATION & COLUMN LAYOUT PLAN & COLUMN DETAILS.

DRAWN	DATE	DRG. NO.	REV. NO.
SEEMA	30.08. 2012	TYPE -4- STR.-3	1

CONSULTANT :

SUNEET PRASAD
STRUCTURAL & CONSULTING ENGINEER

Suneet Prasad

SUNEET PRASAD
B. E., M. E. (CIVIL), M I V, F I V
AUTHORIZED STRUCTURAL ENGINEER
20, PHASE-I, ENGINEERS ENCLAVE
G.M.S. ROAD, DEHRADUN-248 001
REG. No: DoH - UK / ASE - III / 2008

Checked and approved

SUBHASH CHANDRA GUPTA
B.E. Civil (Hon's), M. TECH. (Structure)
Reg. No DOH-UK/ASE-VI/2008
University of [illegible] Energy Studies

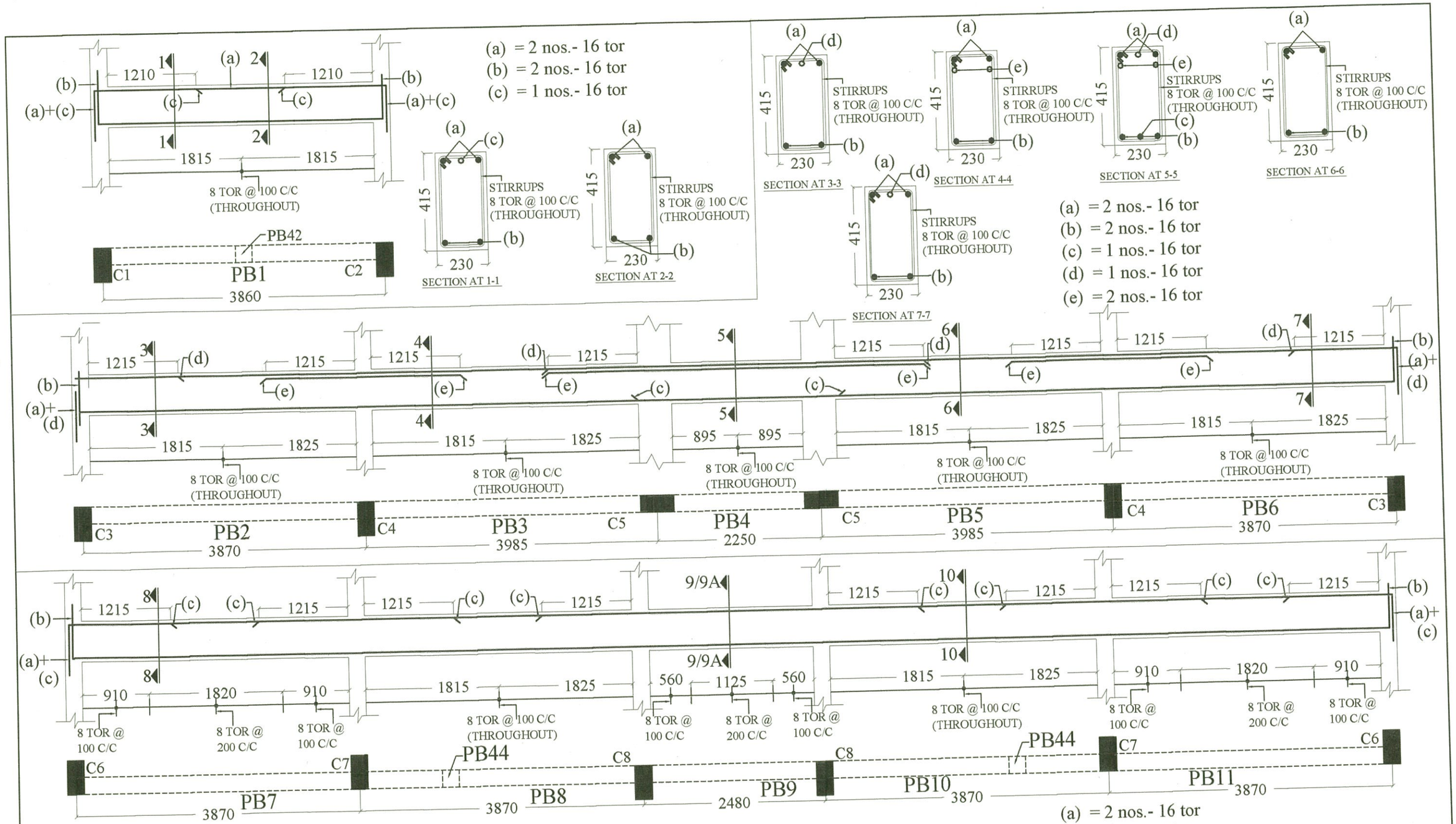

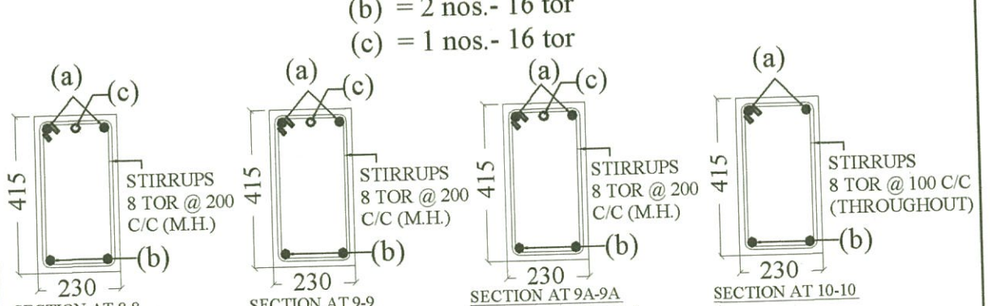

PROJECT

TYPE - 4 RESIDENCE FOR P.W.D. DEHRADUN.

TITLE

REINF. DETAIL OF PLINTH BEAMS.

DRAWN	DATE	DRG. NO.	REV. NO.
SEEMA	03.10. 2012	TYPE -4- STR.-4	1

CONSULTANT :

SUNEET PRASAD
STRUCTURAL & CONSULTING ENGINEER

Suneet Prasad
SUNEET PRASAD
B. E., M. E. (CIVIL), MIV, FIV
AUTHORIZED STRUCTURAL ENGINEER
20, PHASE-I, ENGINEERS ENCLAVE
G.M.S. ROAD, DEHRADUN-248 001
REG. No: DoH - UK / ASE - III / 2008

Checked and approve
Gupta

B.E. Civil
Reg. No. DOH-UK/ASE-VI/2008
University of Petrolium & Energy Studies

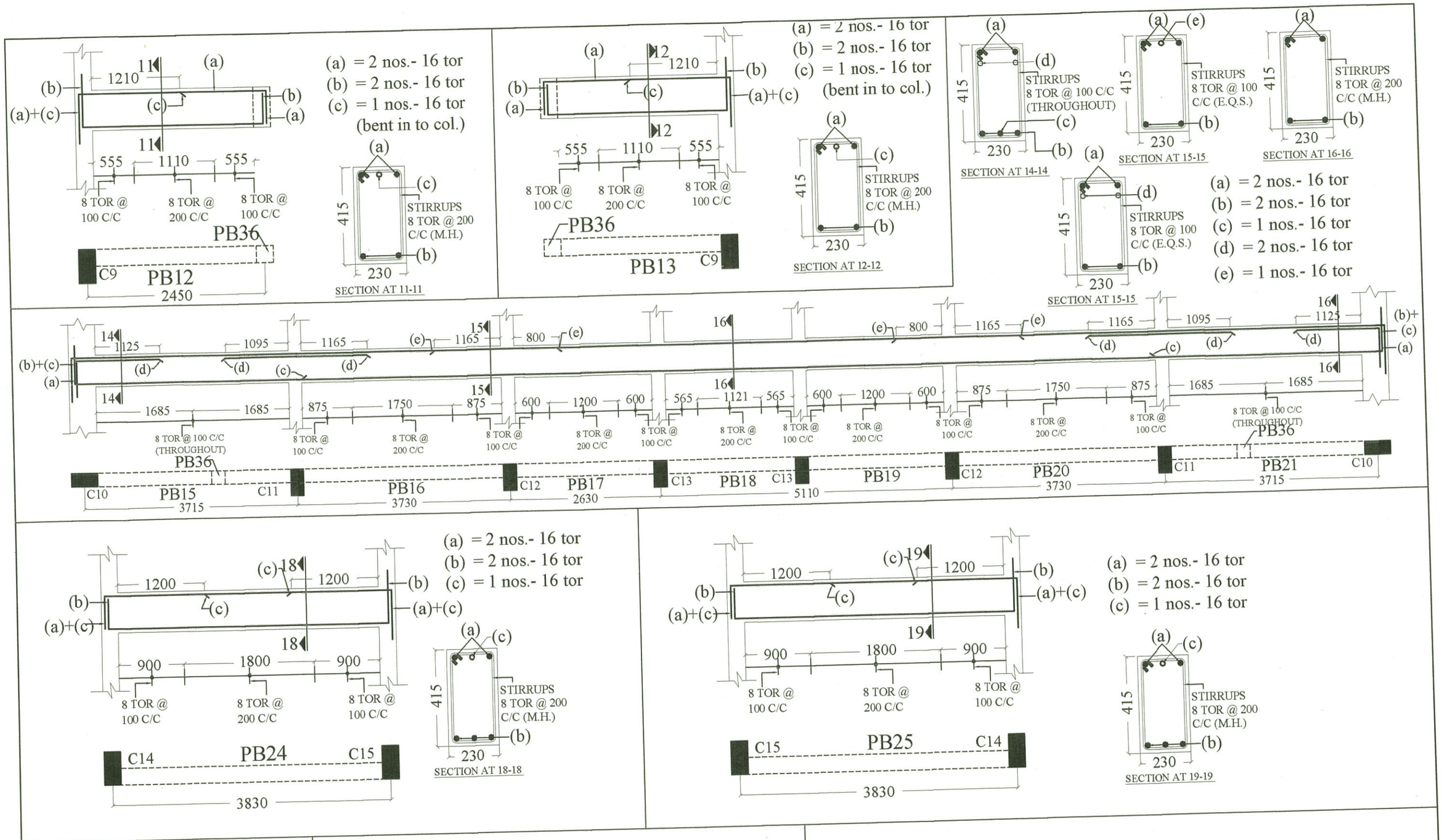

PROJECT

TYPE - 4 RESIDENCE FOR P.W.D. DEHRADUN.

TITLE

REINF. DETAIL OF PLINTH BEAMS.

DRAWN	DATE	DRG. NO.	REV. NO.
SEEMA	03.10. 2012	TYPE -4- STR.-5	1

CONSULTANT :

SUNEET PRASAD
STRUCTURAL & CONSULTING ENGINEER

Suneet Prasad

SUNEET PRASAD
B. E., M. E. (CIVIL), M I V, F I V
AUTHORIZED STRUCTURAL ENGINEER
20, PHASE-I, ENGINEERS ENCLAVE
G.M.S. ROAD, DEHRADUN-248 001
REG. No: DoH - UK / ASE- III / 2008

Checked and approve

SUBHASH CHANDRA GUPTA
B.E. Civil (Hon's), M. TECH. (Structure)
Reg. No. DOH-UK/ASE-VI/2008
University of Petrolium & Energy Studies

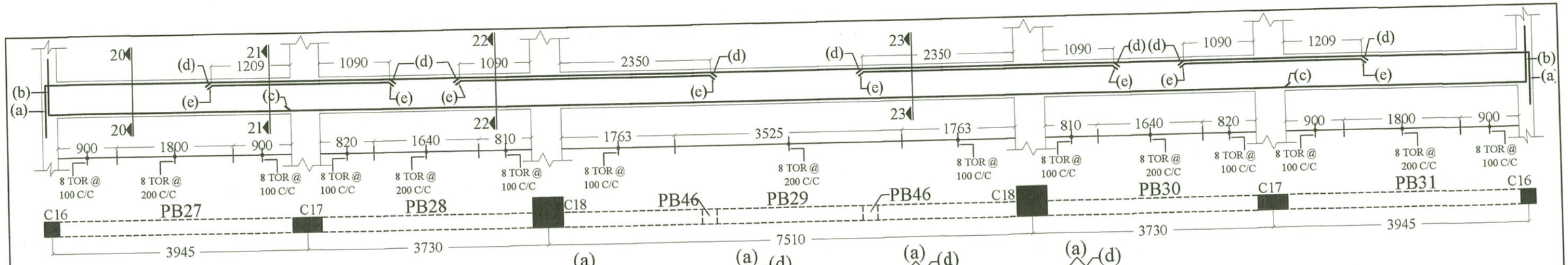

(a) = 2 nos.- 16 tor
(b) = 2 nos.- 16 tor
(c) = 1 nos.- 16 tor
(d) = 1 nos.- 16 tor
(e) = 2 nos.- 16 tor

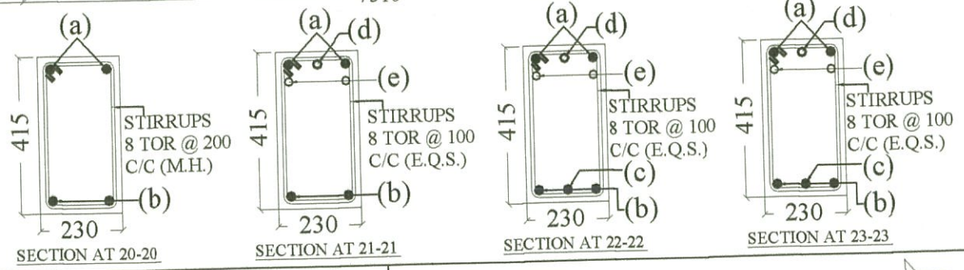

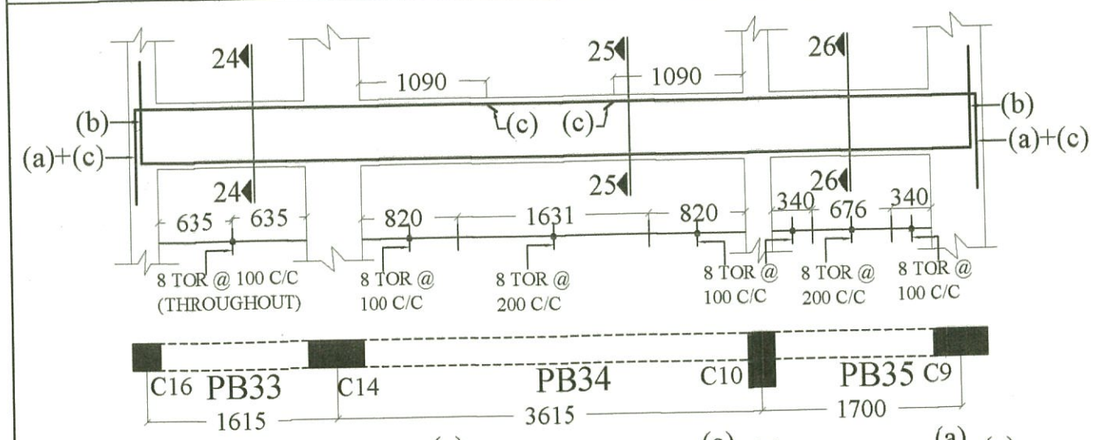

(a) = 2 nos.- 16 tor
(b) = 2 nos.- 16 tor
(c) = 1 nos.- 16 tor

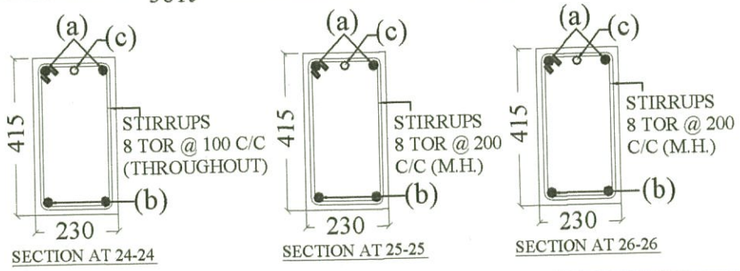

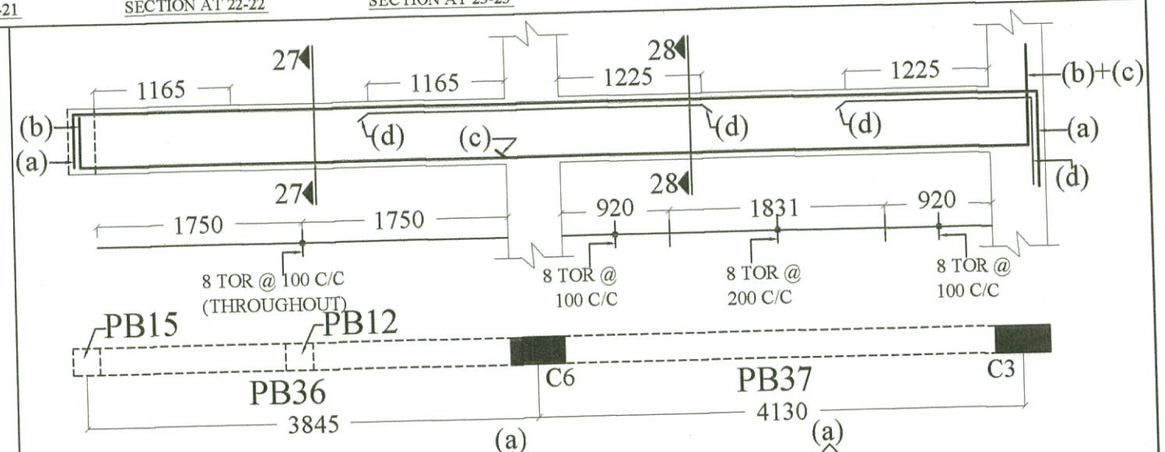

(a) = 2 nos.- 16 tor
(b) = 2 nos.- 16 tor
(c) = 1 nos.- 12 tor
(d) = 2 nos.- 16 tor

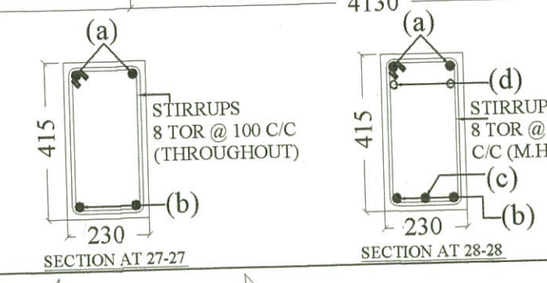

(a) = 2 nos.- 16 tor
(b) = 2 nos.- 16 tor
(c) = 1 nos.- 12 tor
(d) = 2 nos.- 16 tor

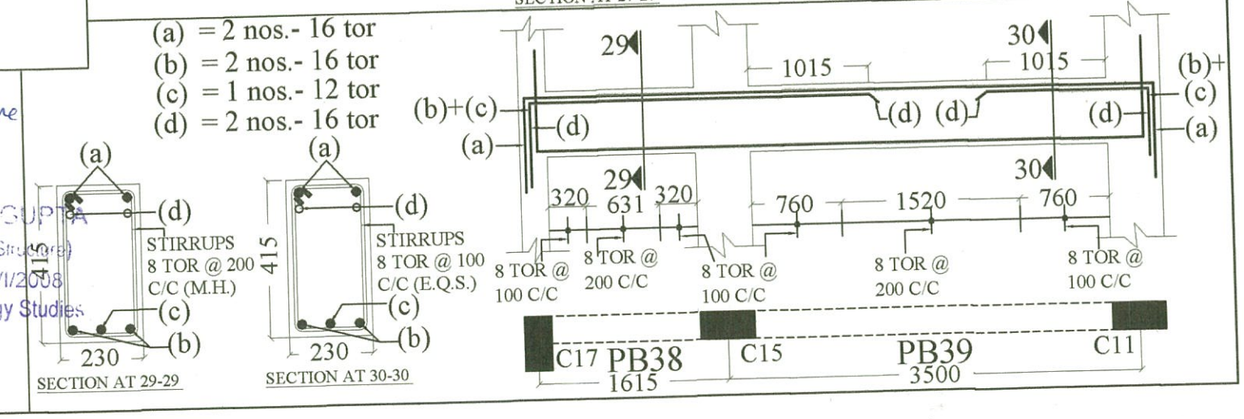

PROJECT	CONSULTANT :		
TYPE - 4 RESIDENCE FOR P.W.D. DEHRADUN.	SUNEET PRASAD STRUCTURAL & CONSULTING ENGINEER	Checked and approve SUBHASH CHANDRA GUPTA B.E. Civil (Hon's), M. TECH. (Structure) Reg. No. DOH-UK/ASE-VI/2008 University of Petrolium & Energy Studies	
TITLE REINF. DETAIL OF PLINTH BEAMS.	Suneet Prasad SUNEET PRASAD B. E., M. E. (CIVIL), M I V, F I V AUTHORIZED STRUCTURAL ENGINEER 20, PHASE-I, ENGINEERS ENCLAVE G.M.S. ROAD, DEHRADUN-248 001 REG. No: DoH - UK / ASE - III / 2008		

DRAWN	DATE	DRG. NO.	REV. NO.
SEEMA	03.10. 2012	TYPE -4- STR.-6	1

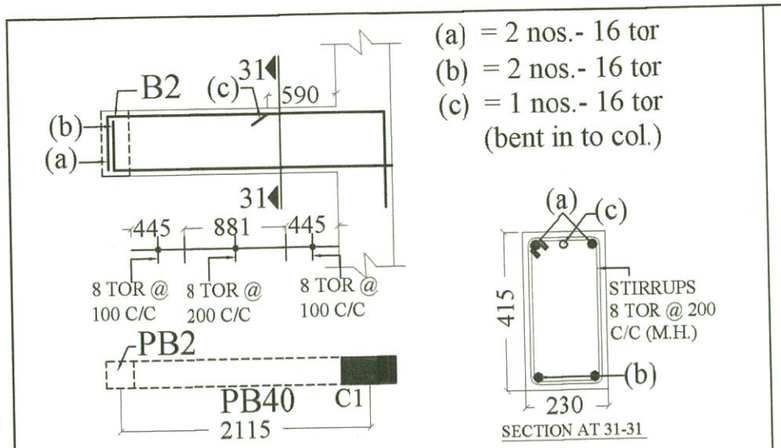

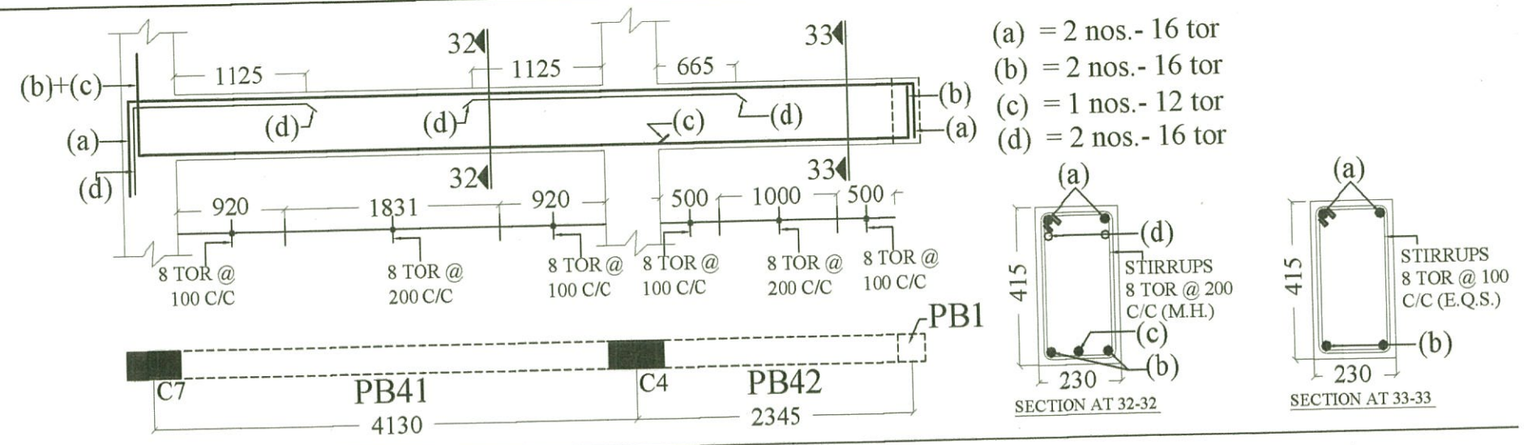

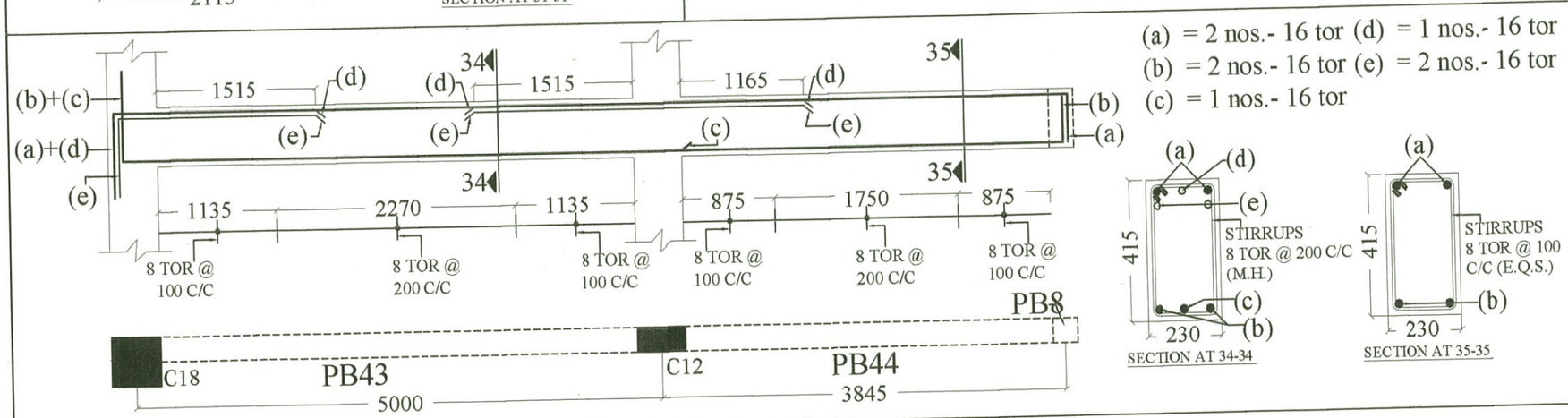

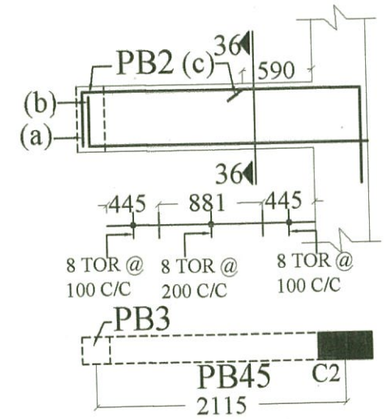

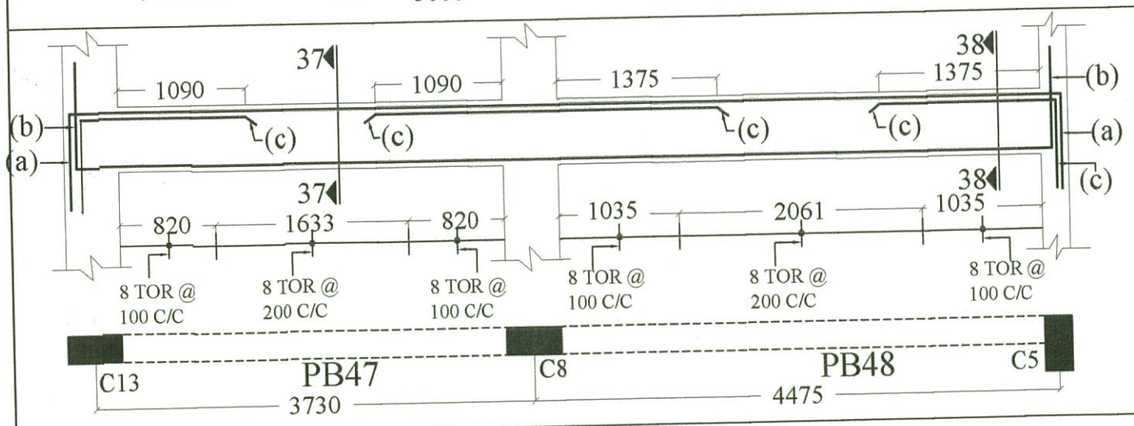

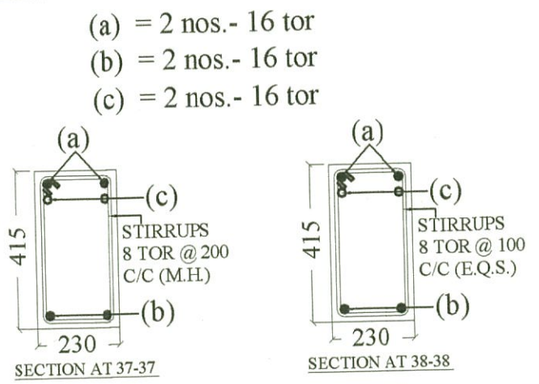

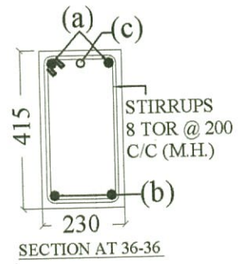

PROJECT

TYPE - 4 RESIDENCE FOR P.W.D. DEHRADUN.

TITLE

REINF. DETAIL OF PLINTH BEAMS.

DRAWN	DATE	DRG. NO.	REV. NO.
SEEMA	03.10. 2012	TYPE -4- STR.-7	1

CONSULTANT :

SUNEET PRASAD
STRUCTURAL & CONSULTING ENGINEER

Suneet Prasad
SUNEET PRASAD
B. E., M. E. (CIVIL), M I V, F I V
AUTHORIZED STRUCTURAL ENGINEER
20, PHASE-I, ENGINEERS ENCLAVE
G.M.S. ROAD, DEHRADUN-248 001
REG. No: DoH - UK / ASE - III / 2008

Checked and approve
Gupta

SUBHASH CHANDRA GUPTA
B.E. Civil (Hons), M. TECH. (Structure)
Reg. No. DOH-UK/ASE-VI/2008
University of Petrolium & Energy Studies

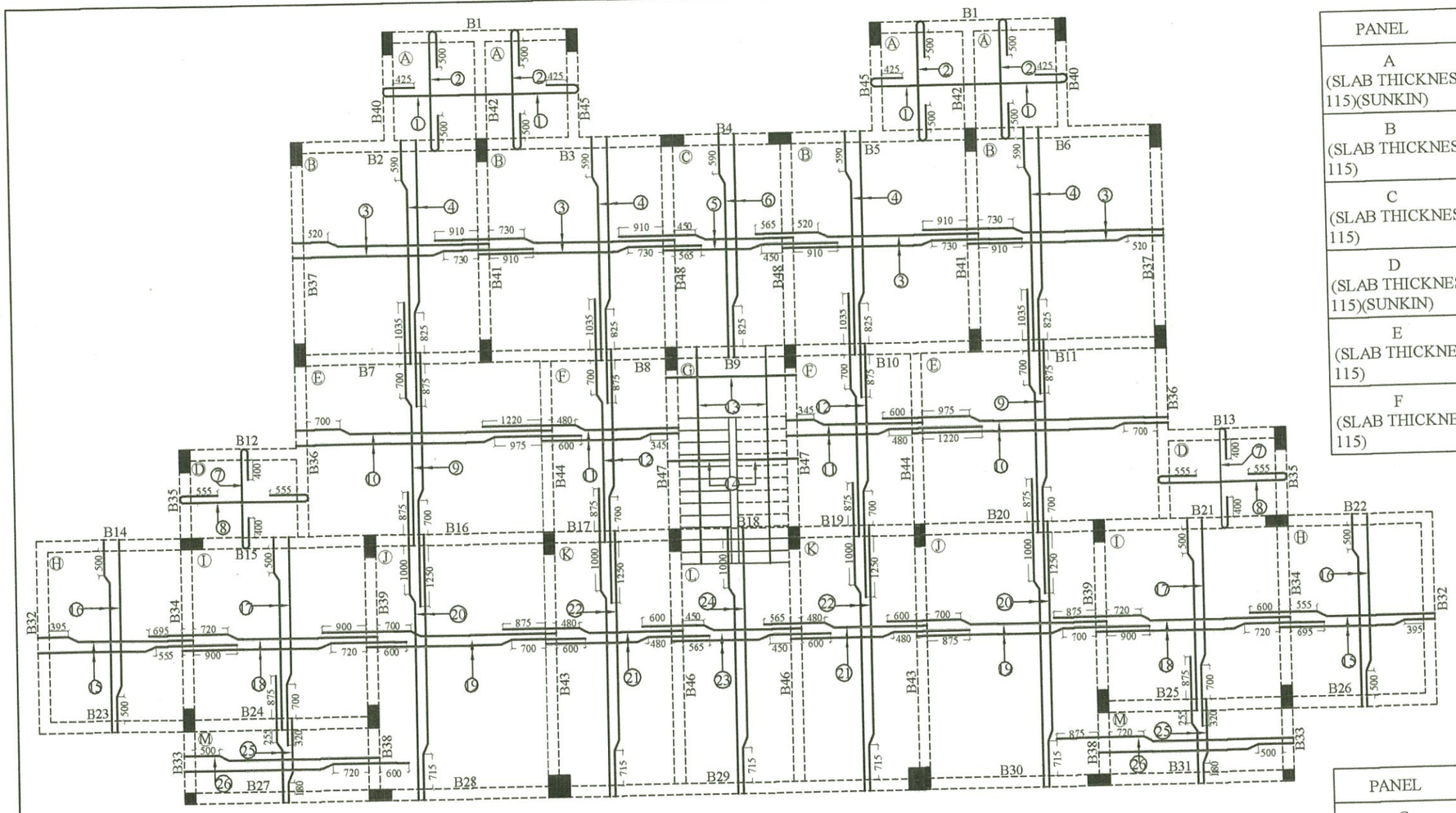

REINF. DETAIL OF FIRST FLOOR SLAB (WITH BOTTOM BARS)

PANEL	BAR MARK	BAR DIA.	SPACING	DESCRIPTION
A (SLAB THICKNESS 115)(SUNKIN)	1	8 Φ	200C/C	BOTTOM MAIN
	2	8 Φ	200C/C	BOTTOM DIST.
B (SLAB THICKNESS 115)	3	8 Φ	150C/C	BOTTOM MAIN
	4	8 Φ	150C/C	BOTTOM DIST.
C (SLAB THICKNESS 115)	5	8 Φ	150C/C	BOTTOM MAIN
	6	8 Φ	200C/C	BOTTOM DIST.
D (SLAB THICKNESS 115)(SUNKIN)	7	8 Φ	200C/C	BOTTOM MAIN
	8	8 Φ	200C/C	BOTTOM DIST.
E (SLAB THICKNESS 115)	9	8 Φ	135C/C	BOTTOM MAIN
	10	8 Φ	160C/C	BOTTOM DIST.
F (SLAB THICKNESS 115)	11	8 Φ	175C/C	BOTTOM MAIN
	12	8 Φ	200C/C	BOTTOM DIST.

PANEL	BAR MARK	BAR DIA.	SPACING	DESCRIPTION
G (SLAB THICKNESS 115)(STAIRCASE)	13	12 Φ	150C/C	BOTTOM MAIN
	14	8 Φ	150C/C	BOTTOM DIST.
H (SLAB THICKNESS 115)	15	8 Φ	175C/C	BOTTOM MAIN
	16	8 Φ	200C/C	BOTTOM DIST.
I (SLAB THICKNESS 115)	17	8 Φ	160C/C	BOTTOM MAIN
	18	8 Φ	160C/C	BOTTOM DIST.
J (SLAB THICKNESS 115)	19	8 Φ	125C/C	BOTTOM MAIN
	20	8 Φ	160C/C	BOTTOM DIST.
K (SLAB THICKNESS 115)	21	8 Φ	175C/C	BOTTOM MAIN
	22	8 Φ	200C/C	BOTTOM DIST.
L (SLAB THICKNESS 115)	23	8 Φ	175C/C	BOTTOM MAIN
	24	8 Φ	200C/C	BOTTOM DIST.
M (SLAB THICKNESS 115)	25	8 Φ	175C/C	BOTTOM MAIN
	26	8 Φ	200C/C	BOTTOM DIST.

PROJECT

TYPE - 4 RESIDENCE FOR P.W.D. DEHRADUN.

TITLE

REINF. DETAIL OF FIRST FLOOR SLAB & BEAMS.

DRAWN	DATE	DRG. NO.	REV. NO.
SEEMA	30.08. 2012	TYPE -4- STR.-8	1

CONSULTANT :

SUNEET PRASAD
STRUCTURAL & CONSULTING ENGINEER

Suneet Prasad

SUNEET PRASAD
B. E., M. E. (CIVIL), M I V, F I V
AUTHORIZED STRUCTURAL ENGINEER
20, PHASE-I, ENGINEERS ENCLAVE
G.M.S. ROAD, DEHRADUN-248 001
REG. No: DoH - UK / ASE - III / 2008

Checked and approve
Gupta

SUBHASH CHANDRA GUPTA
B.E. Civil (Hon's), M. TECH. (Structure)
Reg. No. DOH-UK/ASE-VI/2008
University of Petrolium & Energy Studies

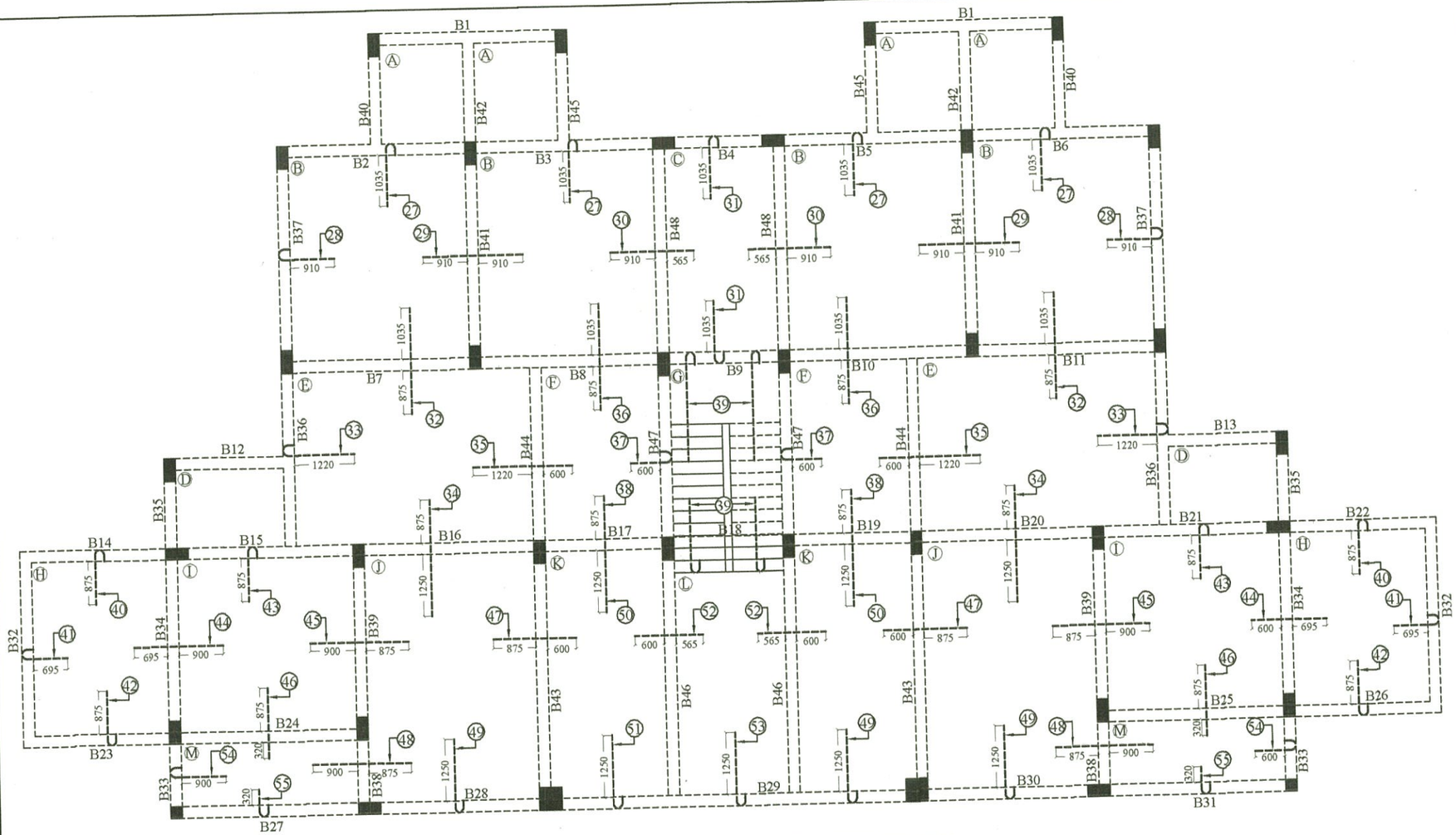

REINF. DETAIL OF FIRST FLOOR SLAB (WITH TOP BARS)

TOP DIST. 8 TOR @ 200 C/C WHERE EVER REQUIRED.

ALL LINTEL BEAMS TO HAVE BBEARING OF 230 ON EITHER SIDE OPENING

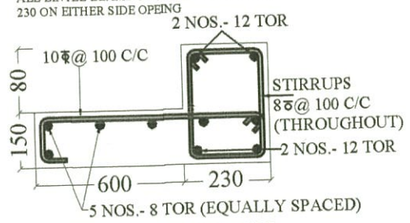

TYPICAL BEAM/ SUNSHADE DETAIL

BAR MARK	BAR DIA.	SPACING	DESCRIPTION
27	8 Φ	300C/C	TOP MAIN
28	8 Φ	400C/C	TOP MAIN
29	8 Φ	300C/C	TOP MAIN
30	8 Φ	300C/C	TOP MAIN
31	8 Φ	400C/C	TOP MAIN
32	8 Φ	270C/C	TOP MAIN
33	8 Φ	320C/C	TOP MAIN
34	8 Φ	250C/C	TOP MAIN
35	8 Φ	320C/C	TOP MAIN
36	8 Φ	300C/C	TOP MAIN
37	8 Φ	350C/C	TOP MAIN
38	8 Φ	400C/C	TOP MAIN
39	12 Φ	125C/C	TOP MAIN
40	8 Φ	400C/C	TOP MAIN
41	8 Φ	350C/C	TOP MAIN
42	8 Φ	400 C/C	TOP MAIN
43	8 Φ	320C/C	TOP MAIN
44	8 Φ	320C/C	TOP MAIN
45	8 Φ	250C/C	TOP MAIN
46	8 Φ	320C/C	TOP MAIN
47	8 Φ	250C/C	TOP MAIN
48	8 Φ	250C/C	TOP MAIN
49	8 Φ	320C/C	TOP MAIN
50	8 Φ	400C/C	TOP MAIN
51	8 Φ	400C/C	TOP MAIN
52	8 Φ	350C/C	TOP MAIN
53	8 Φ	400C/C	TOP MAIN
54	8 Φ	400 C/C	TOP MAIN
55	8 Φ	350C/C	TOP MAIN

PROJECT

TYPE - 4 RESIDENCE FOR P.W.D. DEHRADUN.

TITLE

REINF. DETAIL OF FIRST FLOOR SLAB & BEAMS.

DRAWN	DATE	DRG. NO.	REV. NO.
SEEMA	30.08. 2012	TYPE -4- STR.-9	1

CONSULTANT :

SUNEET PRASAD
STRUCTURAL & CONSULTING ENGINEER

Suneet Prasad

SUNEET PRASAD
B. E., M. E. (CIVIL), M I V, F I V
AUTHORIZED STRUCTURAL ENGINEER
20, PHASE-I, ENGINEERS ENCLAVE
G.M.S. ROAD, DEHRADUN-248 001
REG. No: DoH - UK / ASE - III / 2008

Checked and approve

Gupta

SUBHASH CHANDRA GUPTA
B.E. Civil (Hon's), M. TECH. (Structure)
Reg. No. DOH-UK/ASE-VI/2008
University of Petrolium & Energy Studies

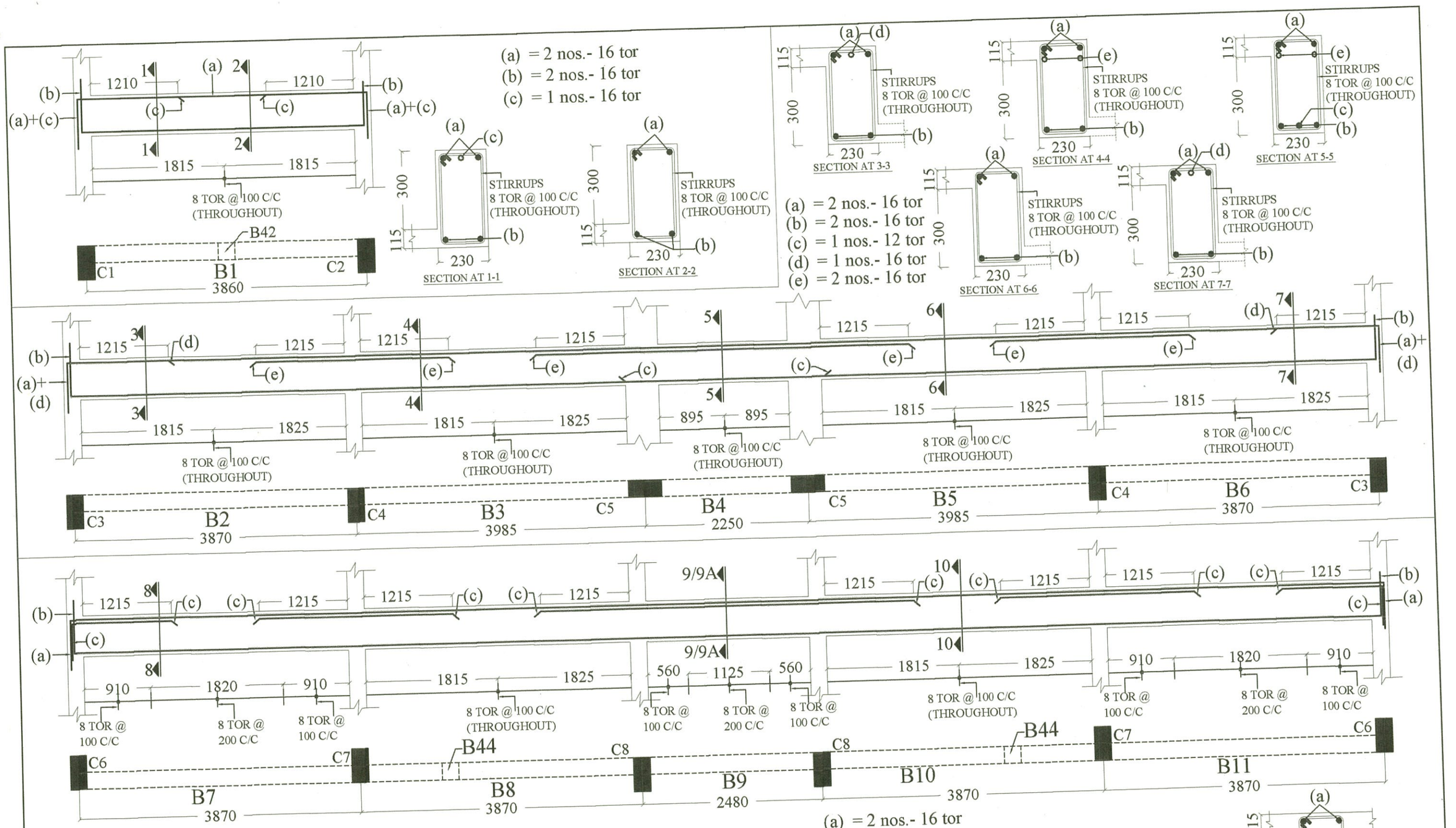

PROJECT

TYPE - 4 RESIDENCE FOR P.W.D. DEHRADUN.

TITLE

REINF. DETAIL OF FIRST FLOOR BEAMS.

DRAWN	DATE	DRG. NO.	REV. NO.
SEEMA	03.10. 2012	TYPE -4- STR.-10	1

CONSULTANT :

SUNEET PRASAD
STRUCTURAL &
CONSULTING ENGINEER

Suneet Prasad

SUNEET PRASAD
B. E., M. E. (CIVIL), M I V, F I V
AUTHORIZED STRUCTURAL ENGINEER
20, PHASE-I, ENGINEERS ENCLAVE
G.M.S. ROAD, DEHRADUN-248 001
REG. No: DoH - UK / ASE - III / 2008

Checked and approve
Gupta

SUBHASH CHANDRA GUPTA
B.E. Civil (Hon's), M. TECH. (Structure)
Reg. No. DOH-UK/ASE-VI/2008
University of Petrolium & Energy Studies

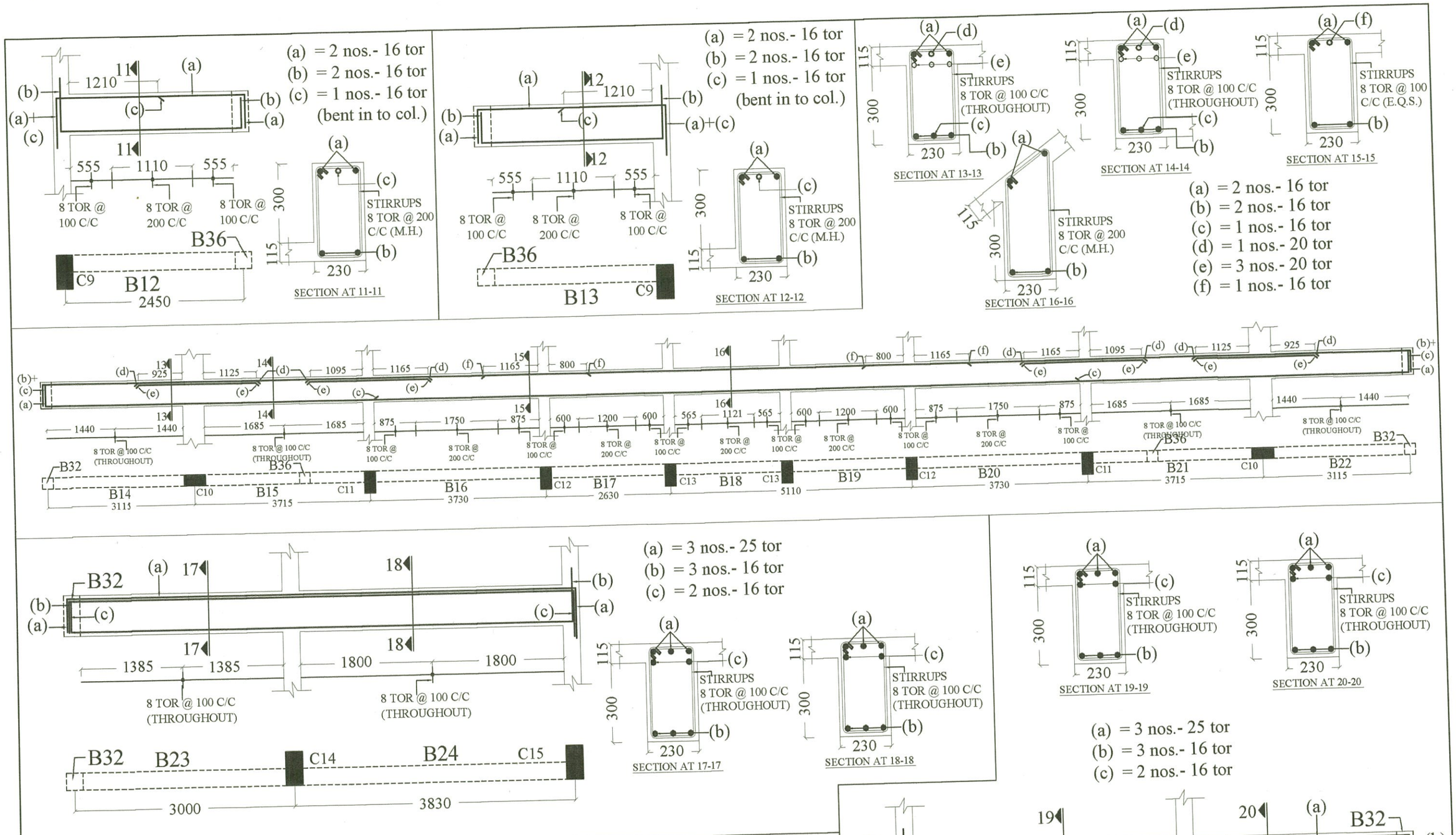

PROJECT

TYPE - 4 RESIDENCE FOR P.W.D. DEHRADUN.

TITLE

REINF. DETAIL OF FIRST FLOOR BEAMS.

DRAWN	DATE	DRG. NO.	REV. NO.
SEEMA	03.10. 2012	TYPE -4- STR.-11	1

CONSULTANT :

SUNEET PRASAD
STRUCTURAL & CONSULTING ENGINEER

Suneet Prasad
SUNEET PRASAD
B. E., M. E. (CIVIL), M I V, F I V
AUTHORIZED STRUCTURAL ENGINEER
20, PHASE-I, ENGINEERS ENCLAVE
G.M.S. ROAD, DEHRADUN-248 001
REG. No: DoH - UK / ASE - III / 2008

Checked and approve
Gupta
SUBHASH CHANDRA GUPTA
B.E. Civil (Hon's), M. TECH. (Structure)
Reg. No. DOH-UK/ASE-VI/2008
University of Petrolium & Energy Studies

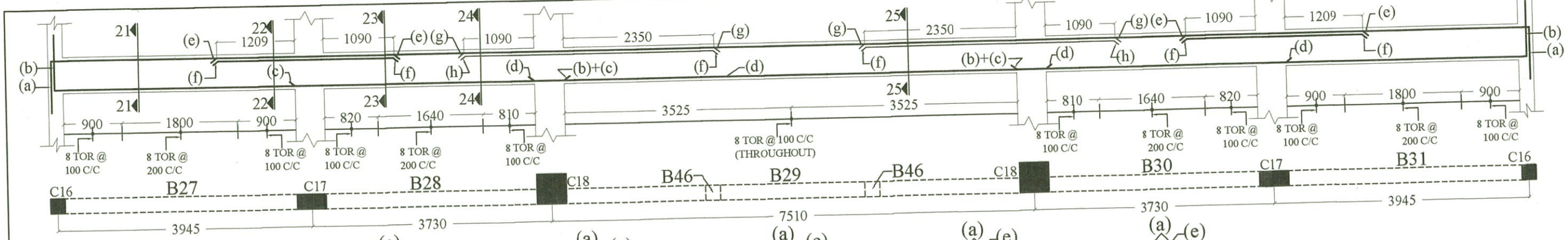

(a) = 2 nos.- 16 tor
(b) = 2 nos.- 16 tor
(c) = 1 nos.- 16 tor
(d) = 3 nos.- 20 tor
(e) = 1 nos.- 16 tor
(f) = 2 nos.- 16 tor
(g) = 1 nos.- 20 tor
(h) = 2 nos.- 20 tor

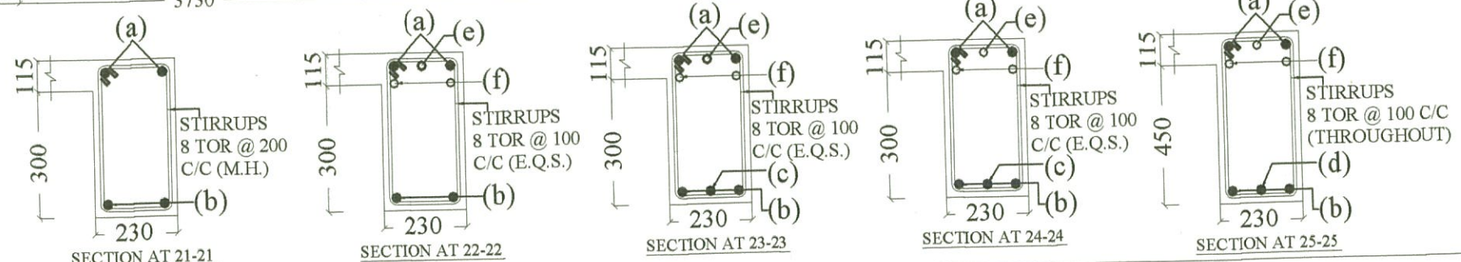

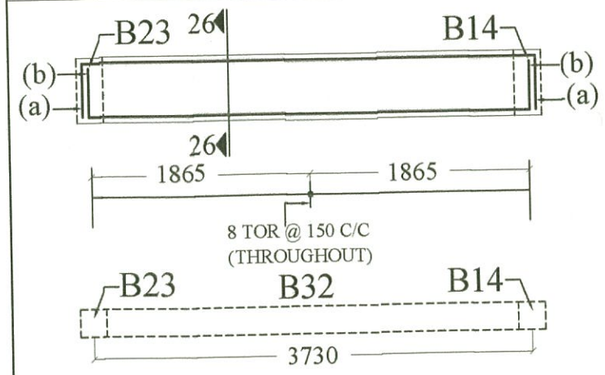

(a) = 2 nos.- 16 tor
(b) = 2 nos.- 16 tor

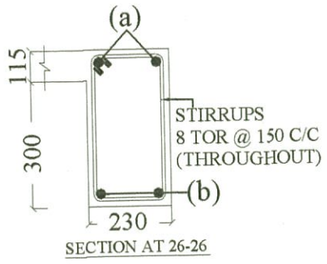

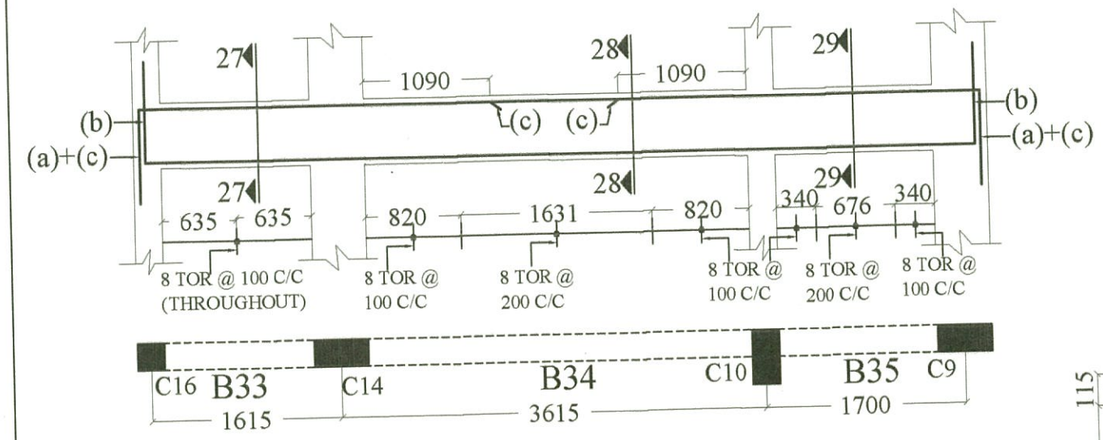

(a) = 2 nos.- 16 tor
(b) = 2 nos.- 16 tor
(c) = 1 nos.- 16 tor

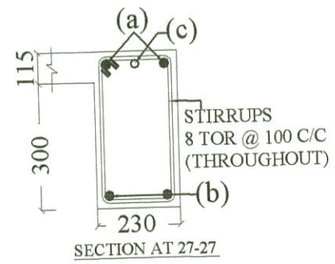

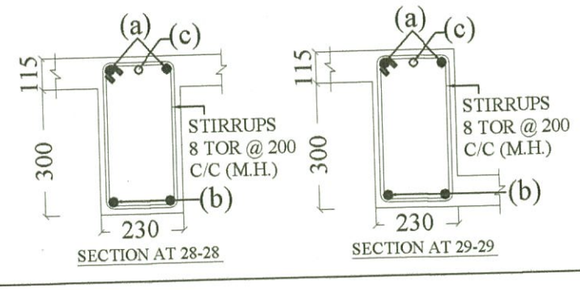

PROJECT

TYPE - 4 RESIDENCE FOR P.W.D. DEHRADUN.

TITLE

REINF. DETAIL OF FIRST FLOOR BEAMS.

DRAWN	DATE	DRG. NO.	REV. NO.
SEEMA	03.10. 2012	TYPE -4- STR.-12	1

CONSULTANT :

SUNEET PRASAD
STRUCTURAL & CONSULTING ENGINEER

Suneet Prasad

SUNEET PRASAD
B. E., M. E. (CIVIL), MIV, FIV
AUTHORIZED STRUCTURAL ENGINEER
20, PHASE-I, ENGINEERS ENCLAVE
G.M.S. ROAD, DEHRADUN-248 001
REG. No: DoH - UK / ASE - III / 2008

Checked and approve

Gupta

SUBHASH CHANDRA GUPTA
B.E. Civil (Hon's), M. TECH. (Structure)
Reg. No. DOH-UK/ASE-VI/2008
University of Petrolium & Energy Studies

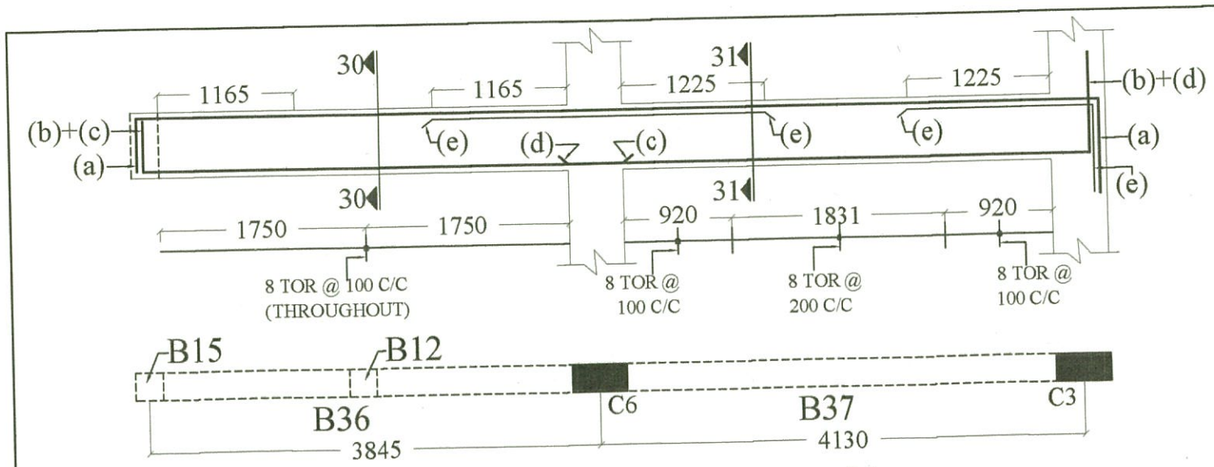

(a) = 2 nos.- 16 tor
(b) = 2 nos.- 16 tor
(c) = 1 nos.- 16 tor
(d) = 1 nos.- 12 tor
(e) = 2 nos.- 16 tor

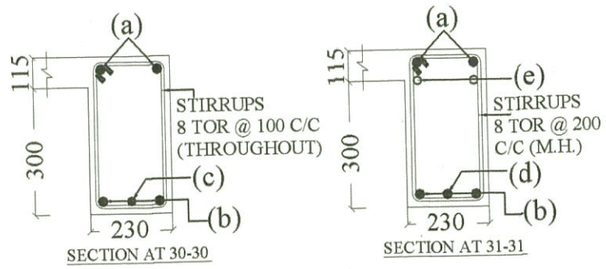

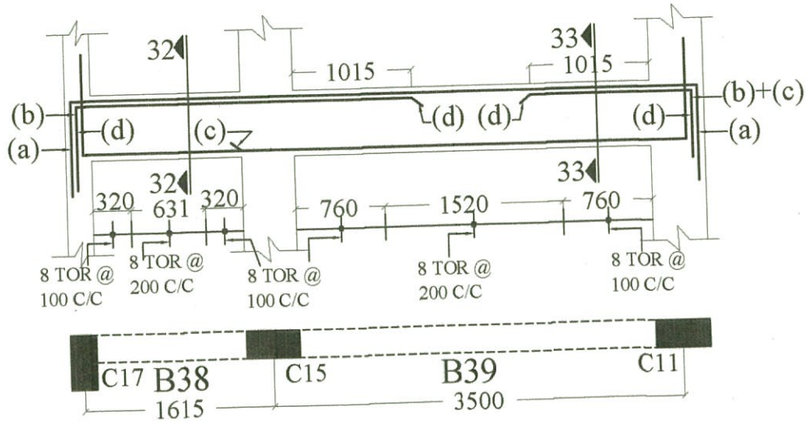

(a) = 2 nos.- 16 tor
(b) = 2 nos.- 16 tor
(c) = 1 nos.- 12 tor
(d) = 2 nos.- 16 tor

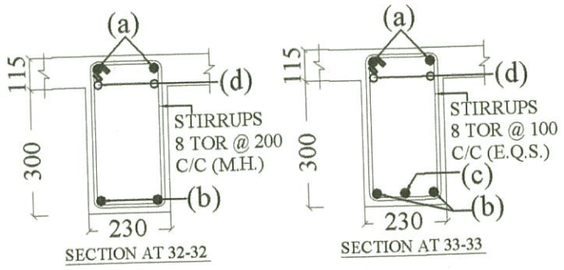

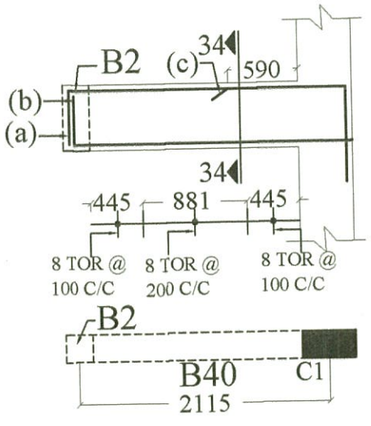

(a) = 2 nos.- 16 tor
(b) = 2 nos.- 16 tor
(c) = 1 nos.- 16 tor
(bent in to col.)

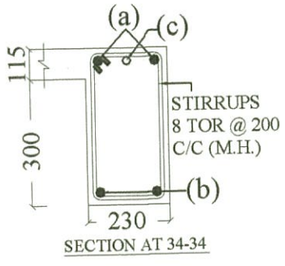

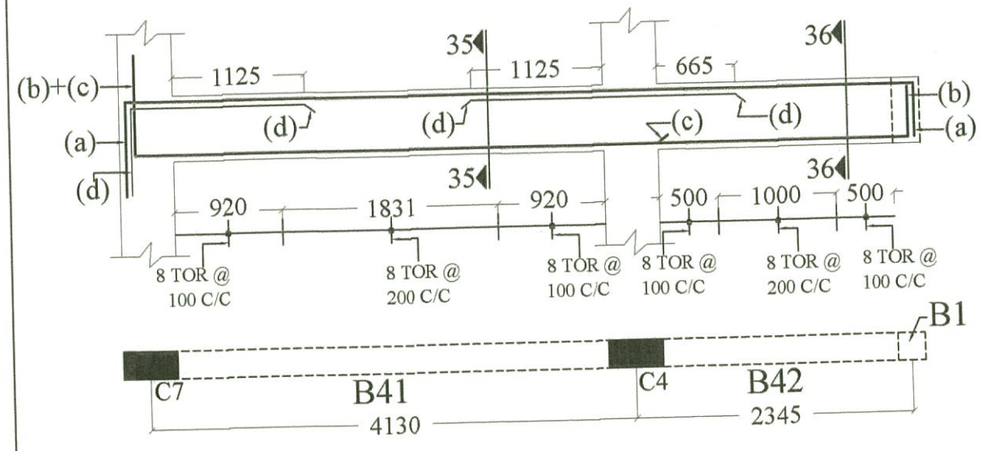

(a) = 2 nos.- 16 tor
(b) = 2 nos.- 16 tor
(c) = 1 nos.- 12 tor
(d) = 2 nos.- 16 tor

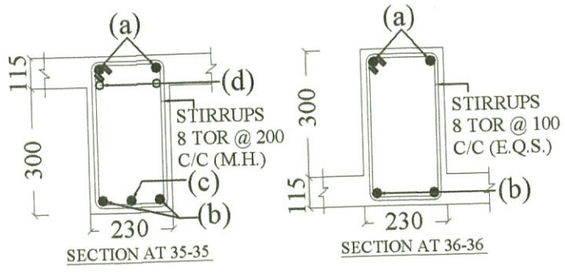

PROJECT

TYPE - 4 RESIDENCE FOR P.W.D. DEHRADUN.

TITLE

REINF. DETAIL OF FIRST FLOOR BEAMS.

DRAWN	DATE	DRG. NO.	REV. NO.
SEEMA	03.10. 2012	TYPE -4- STR.-13	1

CONSULTANT :

SUNEET PRASAD
STRUCTURAL & CONSULTING ENGINEER

Suneet Prasad
SUNEET PRASAD
B. E., M. E. (CIVIL), M I V, F I V
AUTHORIZED STRUCTURAL ENGINEER
20, PHASE-I, ENGINEERS ENCLAVE
G.M.S. ROAD, DEHRADUN-248 001
REG. No: DoH - UK / ASE - III / 2008

Checked and approve

Gupta
SUBHASH CHANDRA GUPTA
B.E. Civil (Hon's), M. TECH. (Structure)
Reg. No. DOH-UK/ASE-VI/2008
University of Petrolium & Energy Studies

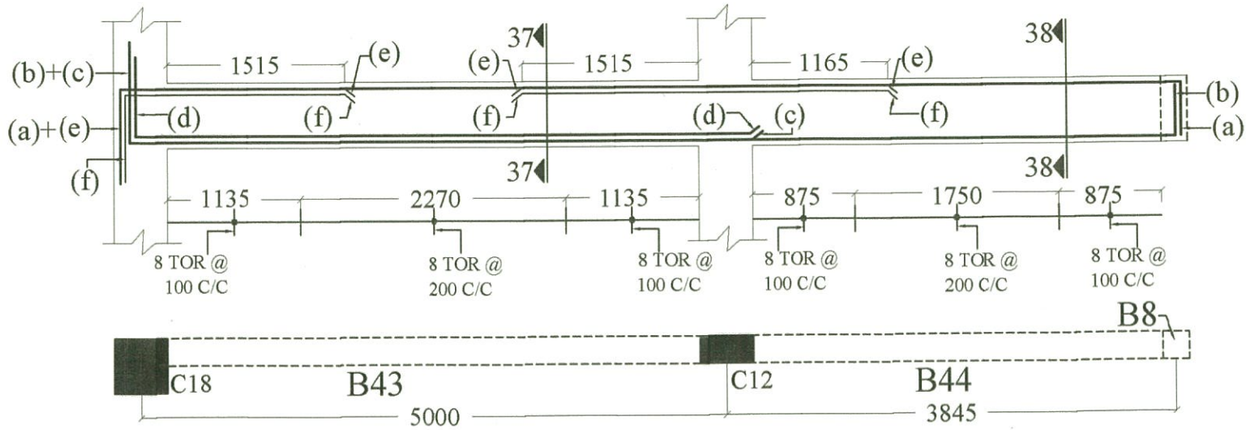

(a) = 2 nos.- 16 tor
(b) = 2 nos.- 16 tor
(c) = 1 nos.- 16 tor
(d) = 2 nos.- 12 tor
(e) = 1 nos.- 16 tor
(f) = 2 nos.- 16 tor

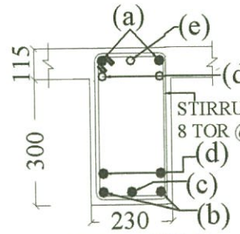

SECTION AT 37-37

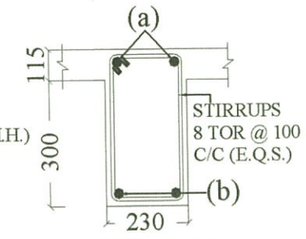

SECTION AT 38-38

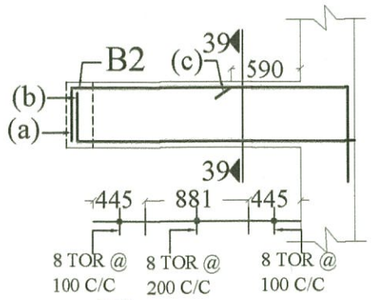

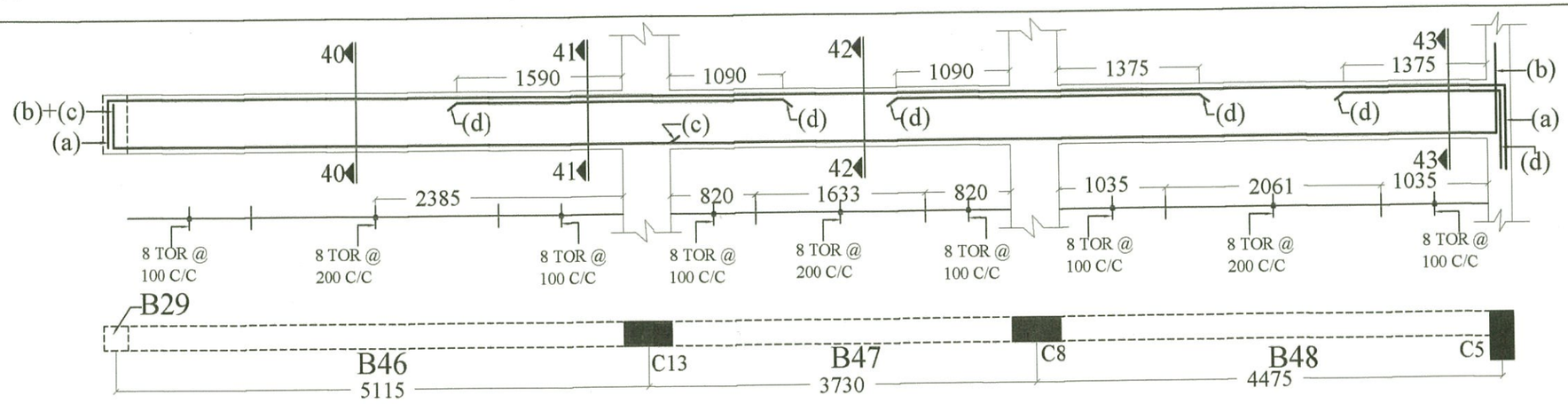

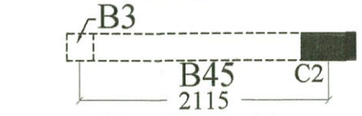

(a) = 2 nos.- 16 tor
(b) = 2 nos.- 16 tor
(c) = 1 nos.- 16 tor
(bent in to col.)

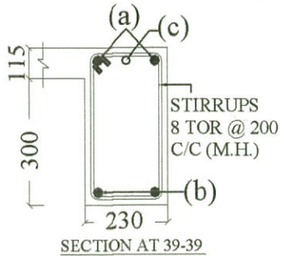

SECTION AT 39-39

(a) = 2 nos.- 16 tor
(b) = 2 nos.- 16 tor
(c) = 1 nos.- 16 tor
(d) = 2 nos.- 16 tor

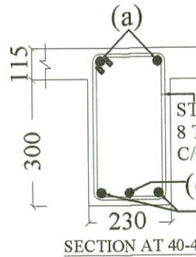

SECTION AT 40-40

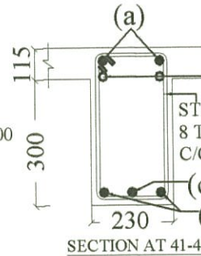

SECTION AT 41-41

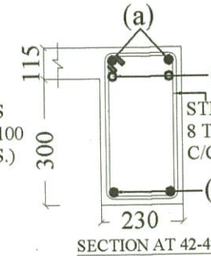

SECTION AT 42-42

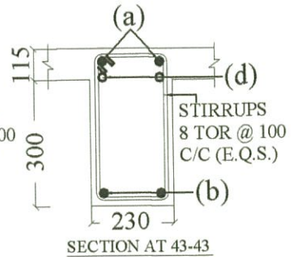

SECTION AT 43-43

PROJECT

TYPE - 4 RESIDENCE FOR P.W.D. DEHRADUN.

TITLE

REINF. DETAIL OF FIRST FLOOR BEAMS.

DRAWN	DATE	DRG. NO.	REV. NO.
SEEMA	03.10. 2012	TYPE -4- STR.-14	1

CONSULTANT :

SUNEET PRASAD
STRUCTURAL & CONSULTING ENGINEER

Suneet Prasad
SUNEET PRASAD
B. E., M. E. (CIVIL), M I V, F I V
AUTHORIZED STRUCTURAL ENGINEER
20, PHASE-I, ENGINEERS ENCLAVE
G.M.S. ROAD, DEHRADUN-248 001
REG. No: DoH - UK / ASE - III / 2008

Checked and approve
Gupta
UBHA
B.E. Civil (H...n's), M. TECH. (Structure)
Reg. No. DOH-UK/ASE-VI/2008
University of Petrolium & Energy Studies

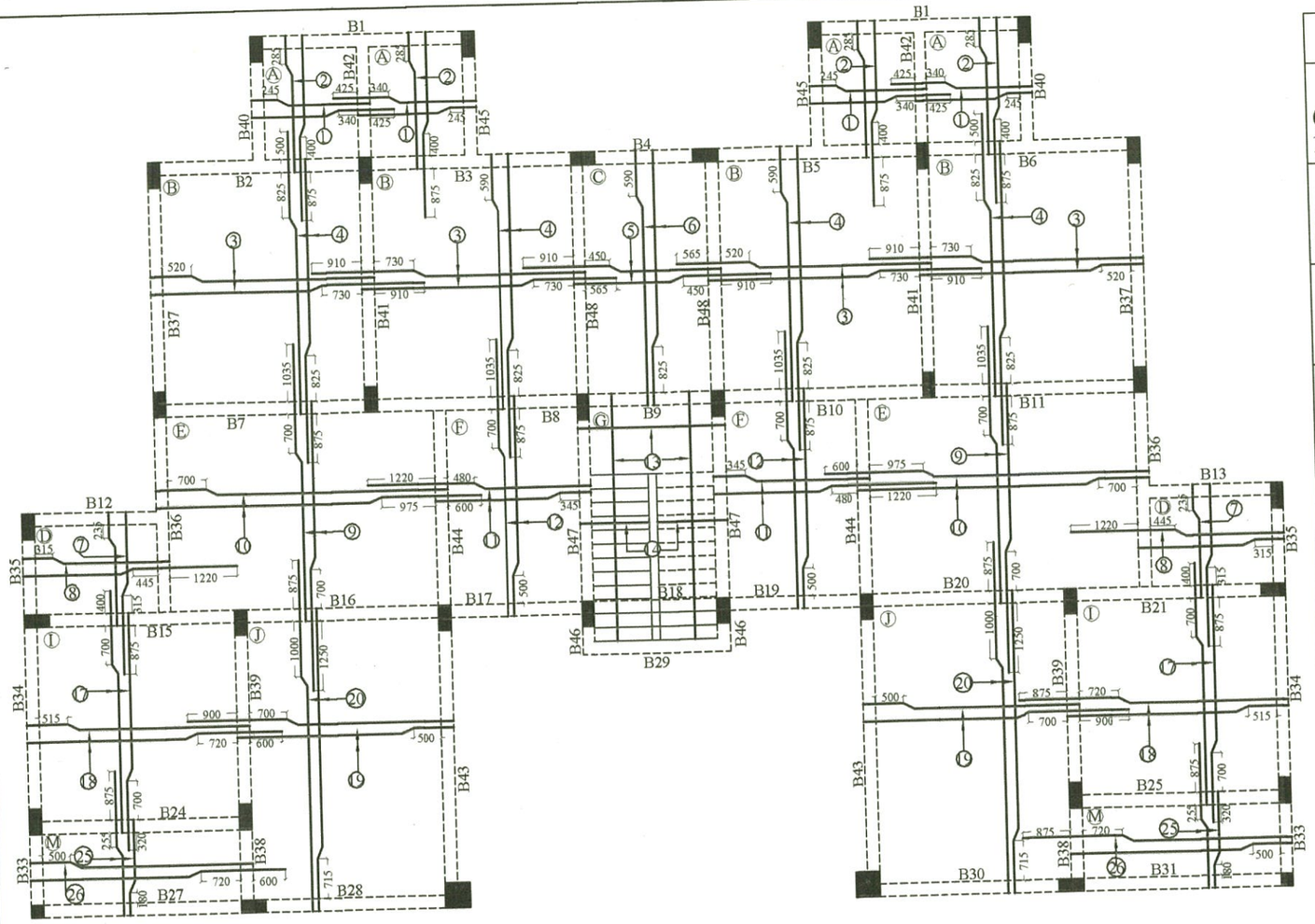

REINF. DETAIL OF ROOF SLAB (WITH BOTTOM BARS)

PANEL	BAR MARK	BAR DIA.	SPACING	DESCRIPTION
A (SLAB THICKNESS 115)	1	8 Φ	200C/C	BOTTOM MAIN
	2	8 Φ	200C/C	BOTTOM DIST.
B (SLAB THICKNESS 115)	3	8 Φ	150C/C	BOTTOM MAIN
	4	8 Φ	150C/C	BOTTOM DIST.
C (SLAB THICKNESS 115)	5	8 Φ	150C/C	BOTTOM MAIN
	6	8 Φ	200C/C	BOTTOM DIST.
D (SLAB THICKNESS 115)	7	8 Φ	200C/C	BOTTOM MAIN
	8	8 Φ	200C/C	BOTTOM DIST.
E (SLAB THICKNESS 115)	9	8 Φ	135C/C	BOTTOM MAIN
	10	8 Φ	160C/C	BOTTOM DIST.
F (SLAB THICKNESS 115)	11	8 Φ	175C/C	BOTTOM MAIN
	12	8 Φ	200C/C	BOTTOM DIST.
G (SLAB THICKNESS 115)	13	12 Φ	125C/C	BOTTOM MAIN
	14	8 Φ	150C/C	BOTTOM DIST.
I (SLAB THICKNESS 115)	17	8 Φ	160C/C	BOTTOM MAIN
	18	8 Φ	160C/C	BOTTOM DIST.
J (SLAB THICKNESS 115)	19	8 Φ	125C/C	BOTTOM MAIN
	20	8 Φ	160C/C	BOTTOM DIST.
M (SLAB THICKNESS 115)	25	8 Φ	175C/C	BOTTOM MAIN
	26	8 Φ	200C/C	BOTTOM DIST.

PROJECT

TYPE - 4 RESIDENCE FOR P.W.D. DEHRADUN.

TITLE

REINF. DETAIL OF ROOF SLAB & BEAMS.

DRAWN	DATE	DRG. NO.	REV. NO.
SEEMA	30.08. 2012	TYPE -4- STR.-15	1

CONSULTANT :

SUNEET PRASAD
STRUCTURAL & CONSULTING ENGINEER

Suneet Prasad

SUNEET PRASAD
B. E., M. E. (CIVIL), M I V, F I V
AUTHORIZED STRUCTURAL ENGINEER
20, PHASE-I, ENGINEERS ENCLAVE
G.M.S. ROAD, DEHRADUN-248 001
REG. No: DoH - UK / ASE - III / 2008

Checked and approve

Gupta

SUBHASH CHANDRA GUPTA
B.E. Civil (Hon's), M. TECH. (Structure)
Reg. No. DOH-UK/ASE-VI/2008
University of Petrolium & Energy Studies

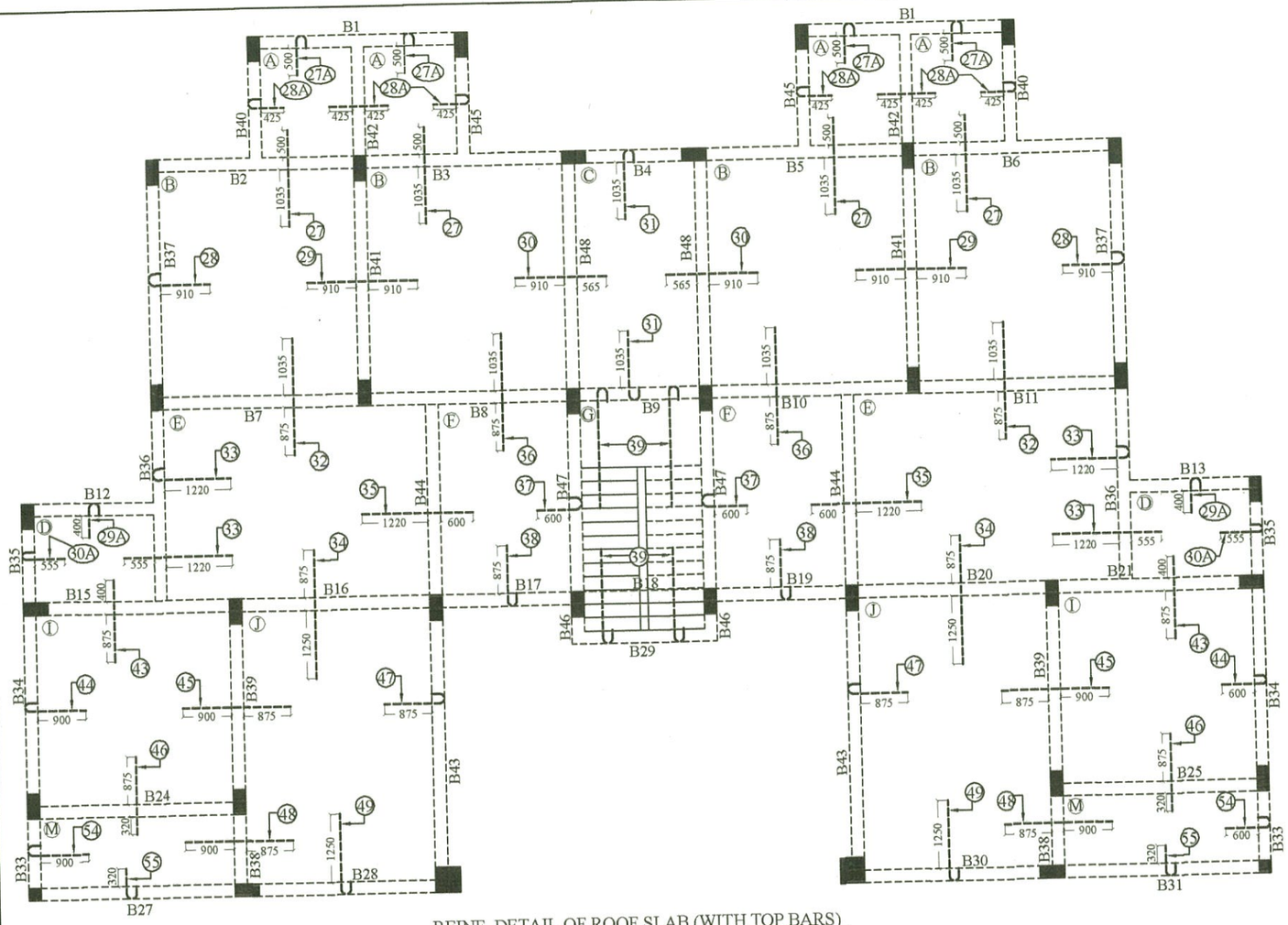

REINF. DETAIL OF ROOF SLAB (WITH TOP BARS)

TOP DIST. 8 TOR @ 200 C/C WHERE EVER REQUIRED.

ALL LINTEL BEAMS TO HAVE BBEARING OF 230 ON EITHER SIDE OPEING

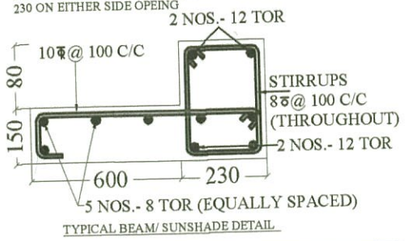

TYPICAL BEAM/ SUNSHADE DETAIL

BAR MARK	BAR DIA.	SPACING	DESCRIPTION
27	8 ϕ	300C/C	TOP MAIN
27A	8 ϕ	400C/C	TOP MAIN
28	8 ϕ	400C/C	TOP MAIN
28A	8 ϕ	400C/C	TOP MAIN
29	8 ϕ	300C/C	TOP MAIN
29A	8 ϕ	400C/C	TOP MAIN
30	8 ϕ	300C/C	TOP MAIN
30A	8 ϕ	400C/C	TOP MAIN
31	8 ϕ	400C/C	TOP MAIN
32	8 ϕ	270C/C	TOP MAIN
33	8 ϕ	320C/C	TOP MAIN
34	8 ϕ	250C/C	TOP MAIN
35	8 ϕ	320C/C	TOP MAIN
36	8 ϕ	300C/C	TOP MAIN
37	8 ϕ	350C/C	TOP MAIN
38	8 ϕ	350C/C	TOP MAIN
39	12 ϕ	125C/C	TOP MAIN
43	8 ϕ	320C/C	TOP MAIN
44	8 ϕ	320C/C	TOP MAIN
45	8 ϕ	250C/C	TOP MAIN
46	8 ϕ	320C/C	TOP MAIN
47	8 ϕ	250C/C	TOP MAIN
48	8 ϕ	250C/C	TOP MAIN
54	8 ϕ	400 C/C	TOP MAIN
55	8 ϕ	350C/C	TOP MAIN

PROJECT
TYPE - 4 RESIDENCE FOR P.W.D. DEHRADUN.

TITLE
REINF. DETAIL OF ROOF SLAB & BEAMS.

DRAWN	DATE	DRG. NO.	REV. NO.
SEEMA	30.08. 2012	TYPE -4- STR.-16	1

CONSULTANT :
SUNEET PRASAD
STRUCTURAL & CONSULTING ENGINEER
Suneet Prasad
SUNEET PRASAD
B. E., M. E. (CIVIL), M I V, F I V
AUTHORIZED STRUCTURAL ENGINEER
20, PHASE-I, ENGINEERS ENCLAVE
G.M.S. ROAD, DEHRADUN-248 001
REG. No: DoH - UK / ASE - III / 2008

Checked and approve
Gupta
SUBHASH CHANDRA GUPTA
B.E. Civil (Hon's), M. TECH. (Structure)
Reg. No. DOH-UK/ASE-VI/2008
University of Petrolium & Energy Studies

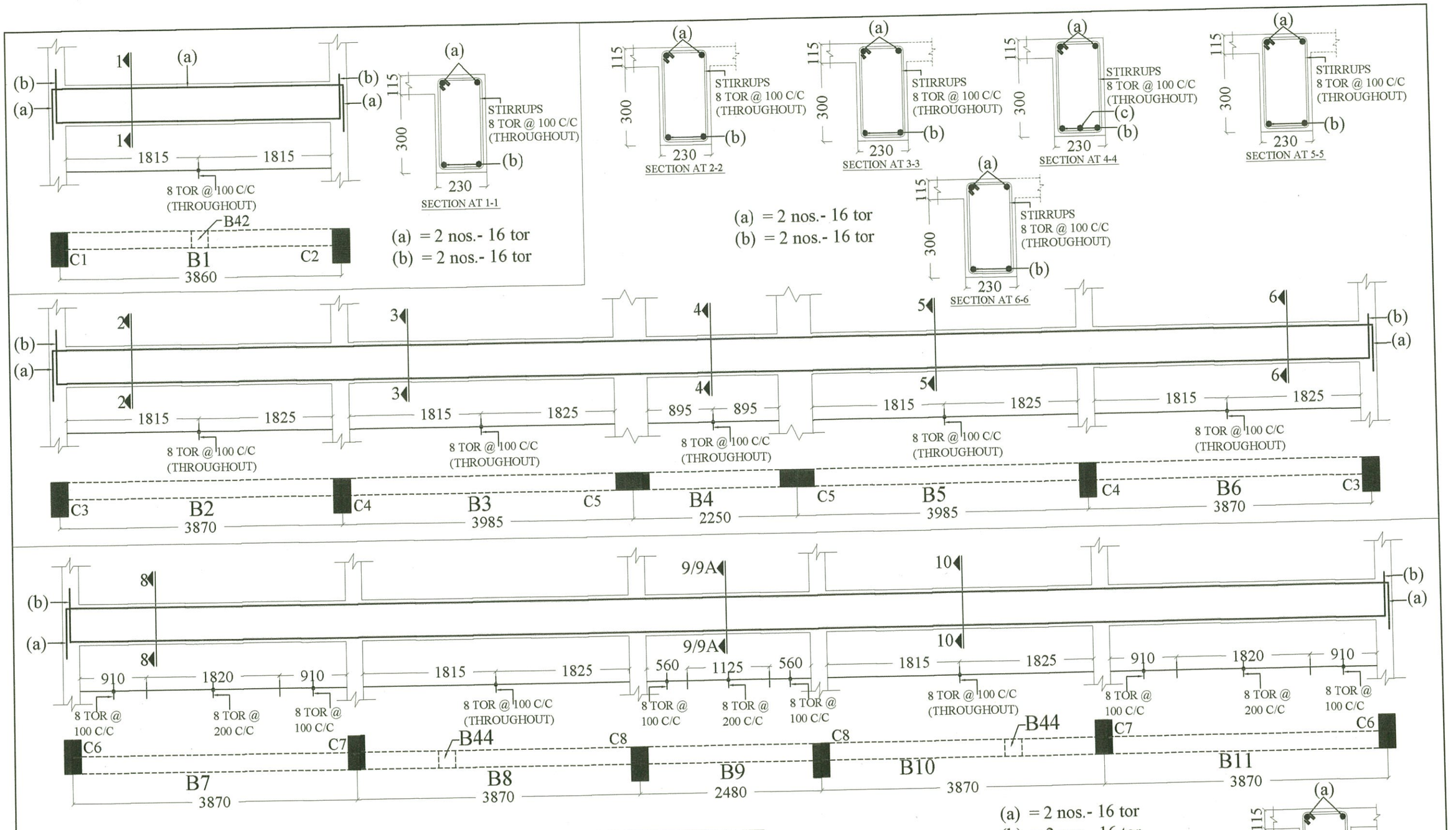

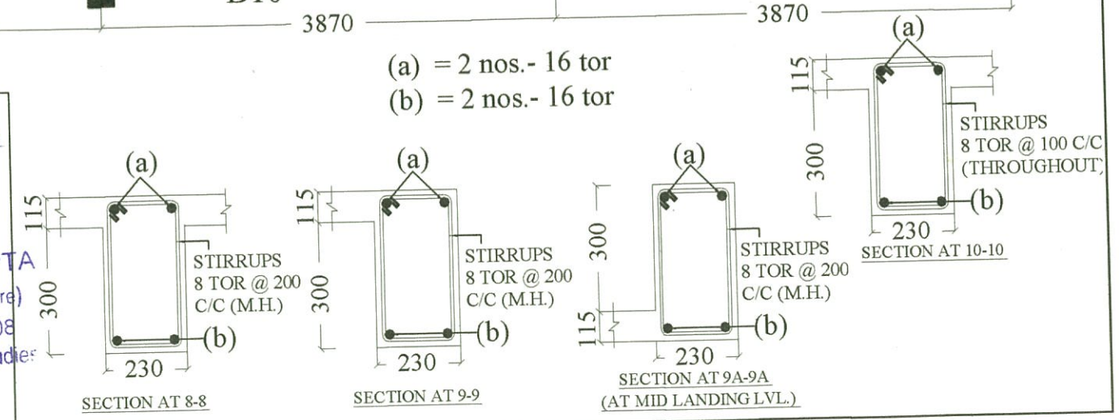

PROJECT

TYPE - 4 RESIDENCE FOR P.W.D.
DEHRADUN.

TITLE

REINF. DETAIL OF ROOF BEAMS.

DRAWN	DATE	DRG. NO.	REV. NO.
SEEMA	03.10. 2012	TYPE -4- STR.-17	1

CONSULTANT :

SUNEET PRASAD
STRUCTURAL &
CONSULTING ENGINEER

Suneet Prasad

SUNEET PRASAD
B. E., M. E. (CIVIL), M I V, F I V
AUTHORIZED STRUCTURAL ENGINEER
20, PHASE-I, ENGINEERS ENCLAVE
G.M.S. ROAD, DEHRADUN-248 001
REG. No: DoH - UK / ASE - III / 2008

Checked and approve

Gupta

SUBHASH CHANDRA GUPTA
B.E. Civil (Hon's), M. TECH. (Structure)
Reg. No. DOH-UK/ASE-VI/2008
University of Petrolium & Energy Studies

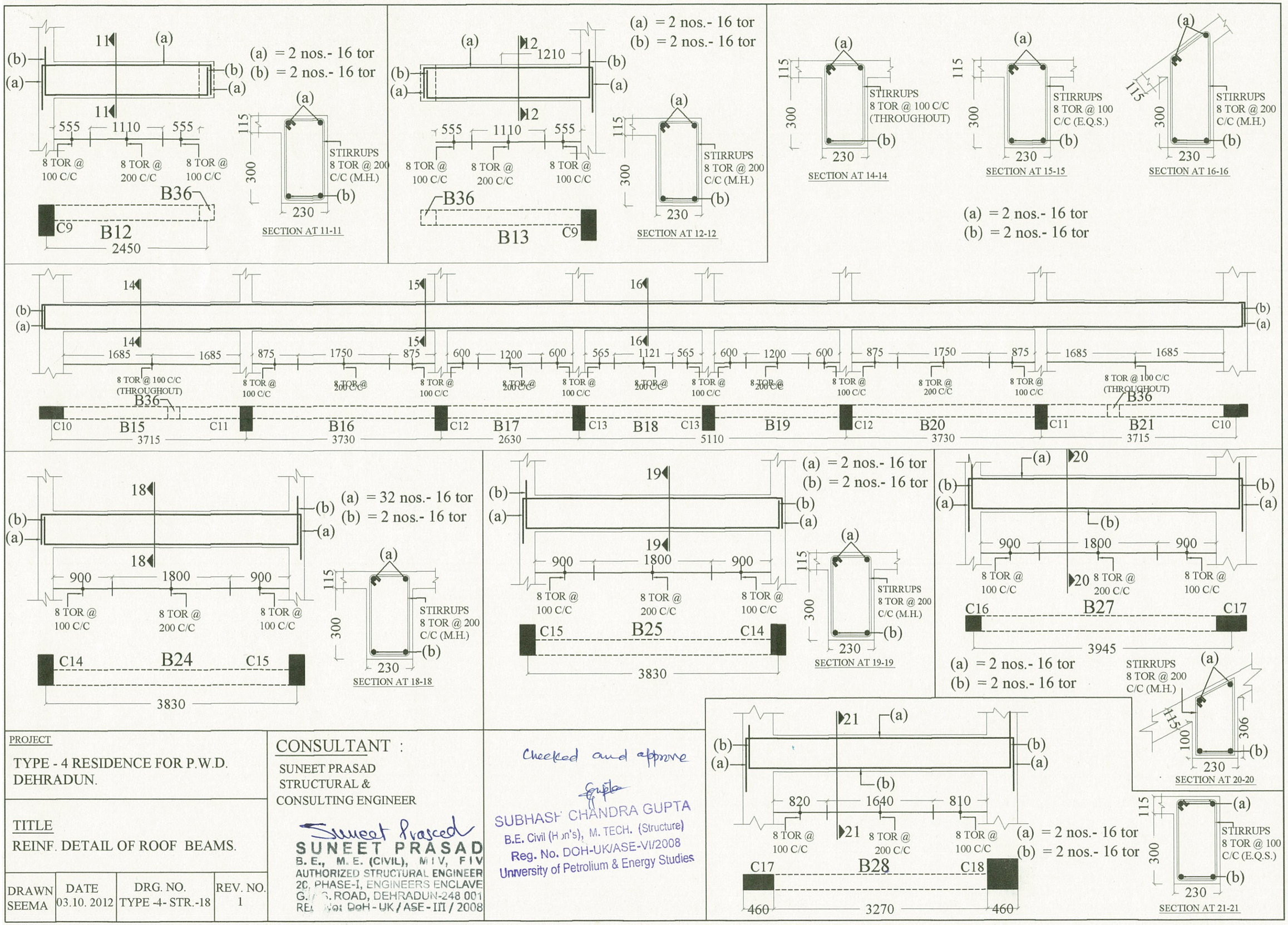

PROJECT

TYPE - 4 RESIDENCE FOR P.W.D. DEHRADUN.

TITLE

REINF. DETAIL OF ROOF BEAMS.

DRAWN	DATE	DRG. NO.	REV. NO.
SEEMA	03.10. 2012	TYPE -4- STR.-18	1

CONSULTANT :

SUNEET PRASAD
STRUCTURAL &
CONSULTING ENGINEER

Suneet Prasad
SUNEET PRASAD
B. E., M. E. (CIVIL), M I V, F I V
AUTHORIZED STRUCTURAL ENGINEER
20, PHASE-I, ENGINEERS ENCLAVE
G. S. ROAD, DEHRADUN-248 001
REG. No: DoH - UK / ASE - III / 2008

Checked and approve

Gupta

SUBHASH CHANDRA GUPTA
B.E. Civil (Hon's), M. TECH. (Structure)
Reg. No. DOH-UK/ASE-VI/2008
University of Petrolium & Energy Studies

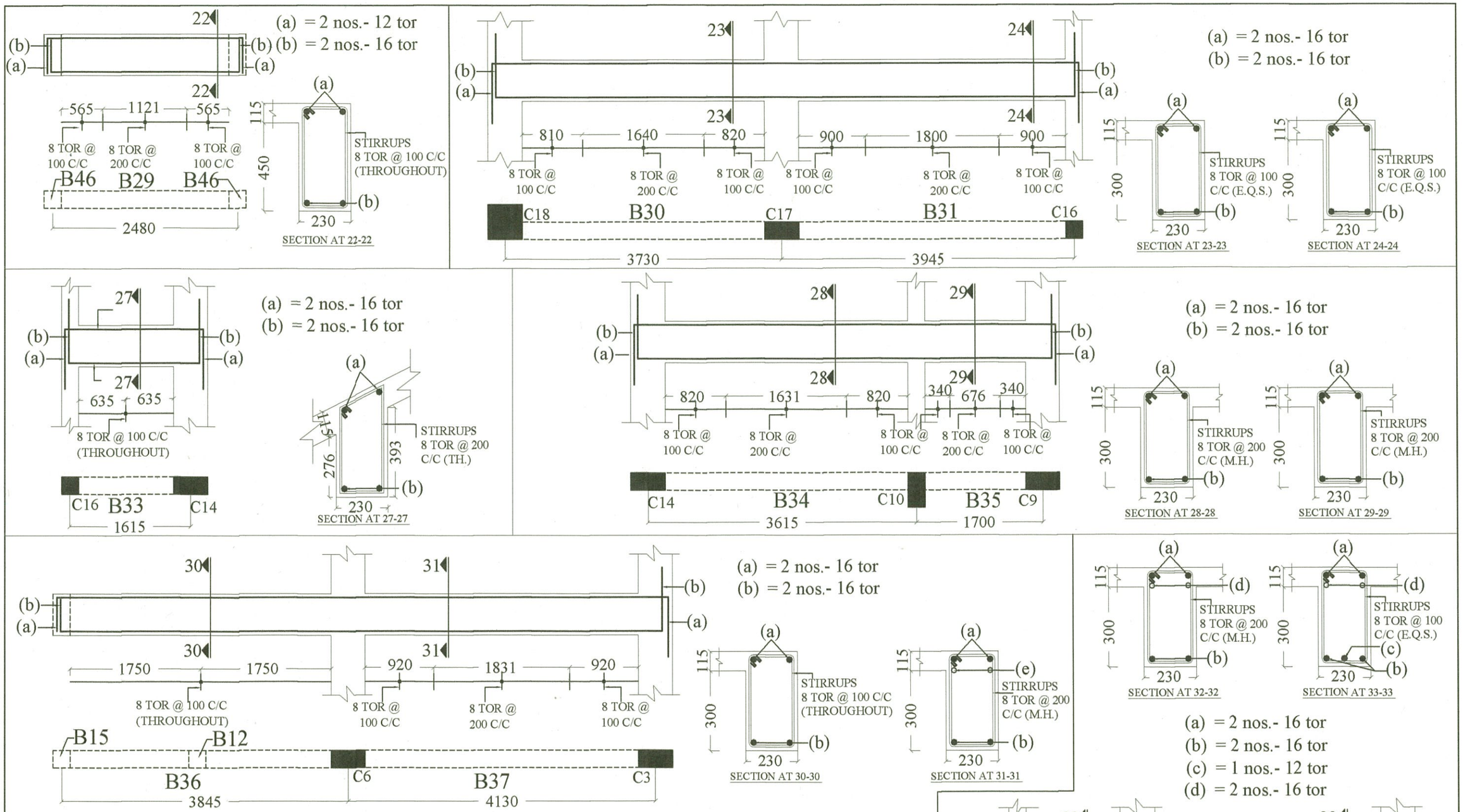

PROJECT

TYPE - 4 RESIDENCE FOR P.W.D. DEHRADUN.

TITLE

REINF. DETAIL OF ROOF BEAMS.

DRAWN	DATE	DRG. NO.	REV. NO.
SEEMA	03.10. 2012	TYPE -4- STR.-19	1

CONSULTANT :

SUNEET PRASAD
STRUCTURAL & CONSULTING ENGINEER

Suneet Prasad.
SUNEET PRASAD
B. E., M. E. (CIVIL), M I V, F I V
AUTHORIZED STRUCTURAL ENGINEER
20, PHASE-I, ENGINEERS ENCLAVE
G.M.S. ROAD, DEHRADUN-248 001
REG. No: DoH - UK / ASE - III / 2008

Checked and approve

Gupta
SUBHASH CHANDRA GUPTA
B.E. Civil (Hon's), M. TECH. (Structure)
Reg. No. DOH-UK/ASE-VI/2008
University of Petrolium & Energy Studies

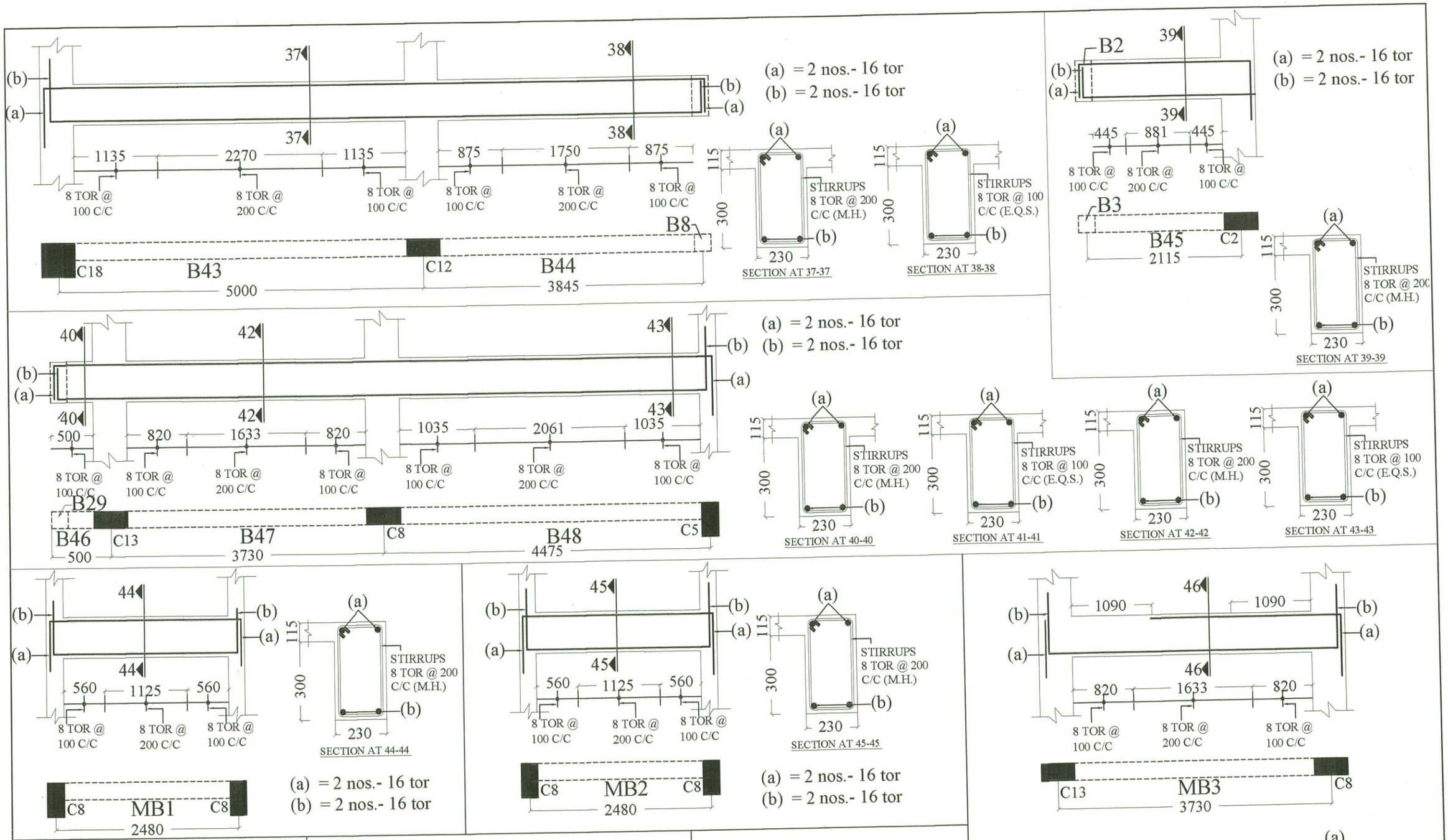

PROJECT

TYPE - 4 RESIDENCE FOR P.W.D. DEHRADUN.

TITLE

REINF. DETAIL OF ROOF BEAMS.

DRAWN	DATE	DRG. NO.	REV. NO.
SEEMA	03.10. 2012	TYPE -4- STR.-20	1

CONSULTANT :

SUNEET PRASAD
STRUCTURAL & CONSULTING ENGINEER

Suneet Prasad
SUNEET PRASAD
B. E., M. E. (CIVIL), M I V, F I V
AUTHORIZED STRUCTURAL ENGINEER
20, PHASE-I, ENGINEERS ENCLAVE
G.M.S. ROAD, DEHRADUN-248 001
REG. No: DoH - UK / ASE - III / 2008

Checked and approve.

SUBHASH CHANDRA GUPTA
B.E. Civil (Hon's), M. TECH. (Structure)
Reg. No. DOH-UK/ASE-VI/2008
University of Petrolium & Energy Studies

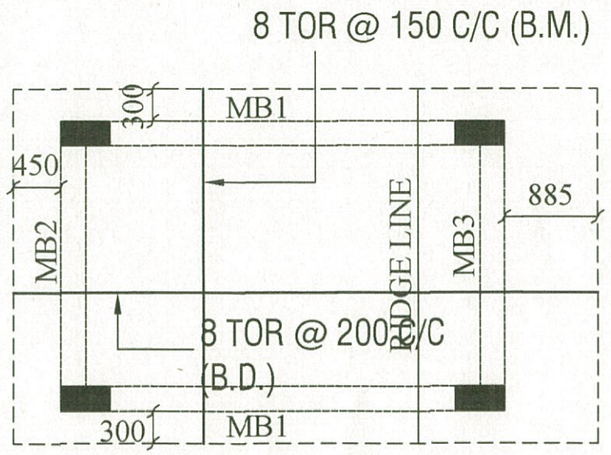

REINF. DETAIL OF MUMTY SLAB
(WITH BOTTOM BARS)
(115 thick slab)

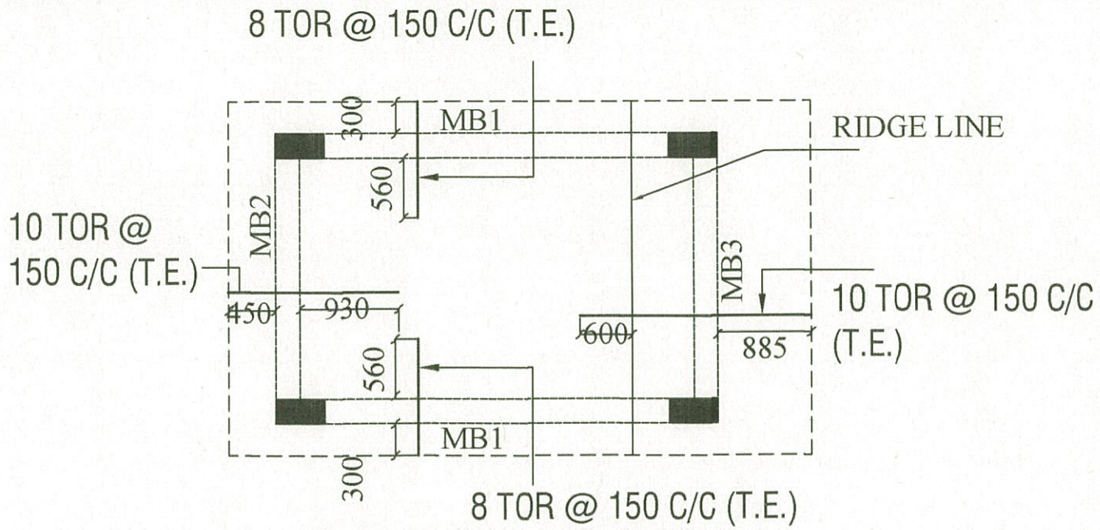

REINF. DETAIL OF MUMTY SLAB
(WITH TOP BARS) (115 thick slab)
TOP DISST. 8 TOR @ 200 C/C (WHEREVER REQUIRED)

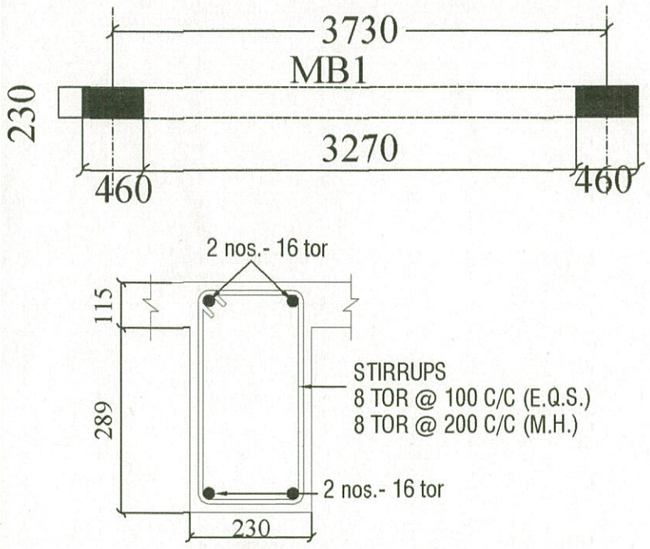

MB1

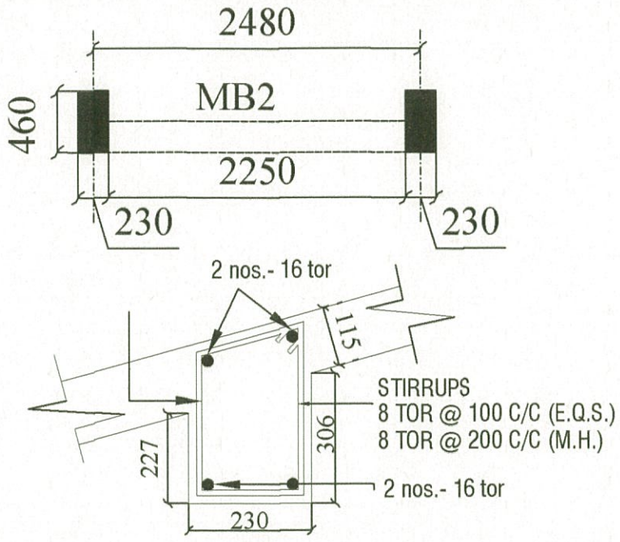

MB2

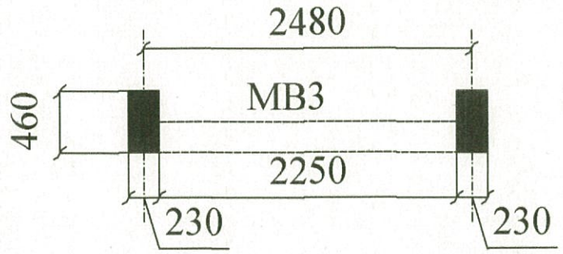

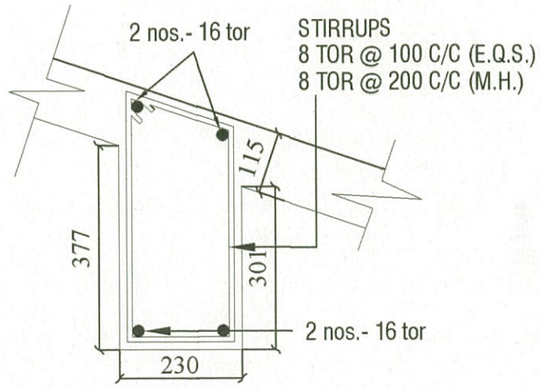

MB3

PROJECT

TYPE - 4 RESIDENCE FOR P.W.D.
DEHRADUN.

TITLE

REINF. DETAIL OF ROOF BEAMS.

DRAWN	DATE	DRG. NO.	REV. NO.
SEEMA	03.10. 2012	TYPE -4- STR.-21	1

CONSULTANT :

SUNEET PRASAD
STRUCTURAL & CONSULTING ENGINEER

Suneet Prasad.
SUNEET PRASAD
B. E., M. E. (CIVIL), M I V, F I V
AUTHORIZED STRUCTURAL ENGINEER
20, PHASE-I, ENGINEERS ENCLAVE
G.M.S. ROAD, DEHRADUN-248 001
REG. No: DoH - UK / ASE - III / 2008

Checked and approve
Gupta
SUBHASH CHANDRA GUPTA
B.E. Civil (Hon's), M. TECH. (Structure)
Reg. No. DOH-UK/ASE-VI/2008
University of Petrolium & Energy Studies